Technical data / project-drafting manual / accessories

Demag DC-Pro chain hoists

Manufacturer

Demag Cranes & Components GmbH
PO Box 67 · 58286 Wetter (Germany)
Telephone +49 (0)2335 92-0
Telefax +49 (0)2335 92-7676
www.demagcranes.com

Quickly find your hoist – with the online product configurator

www.demag-designer.com is the address where all important facts and data on the Demag DC chain hoist can be found.

This information and planning platform provides you with a comprehensive product overview and contains all the data you need for project engineering. Changing over to different languages is possible.

You can even download the 3D-CAD drawings of the entire Demag chain hoist range and integrate them into your design drawings.

Suitable hoists and accessories can be selected easily and safely.

A practical and intuitive user interface ensures that you find the right solution to meet your needs quickly and easily.

The Demag Internet order system at **www.demag-shop.com** also makes it possible to order chain hoists and components immediately.

Designer portal

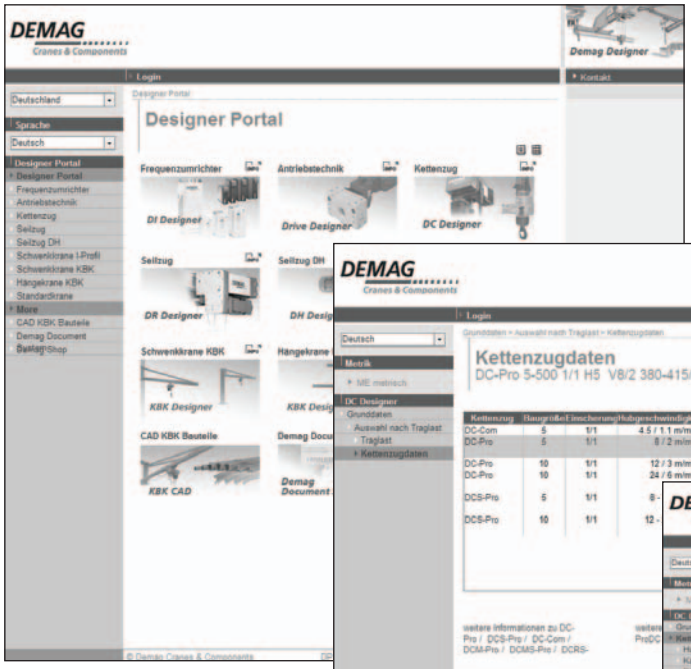

Product selection

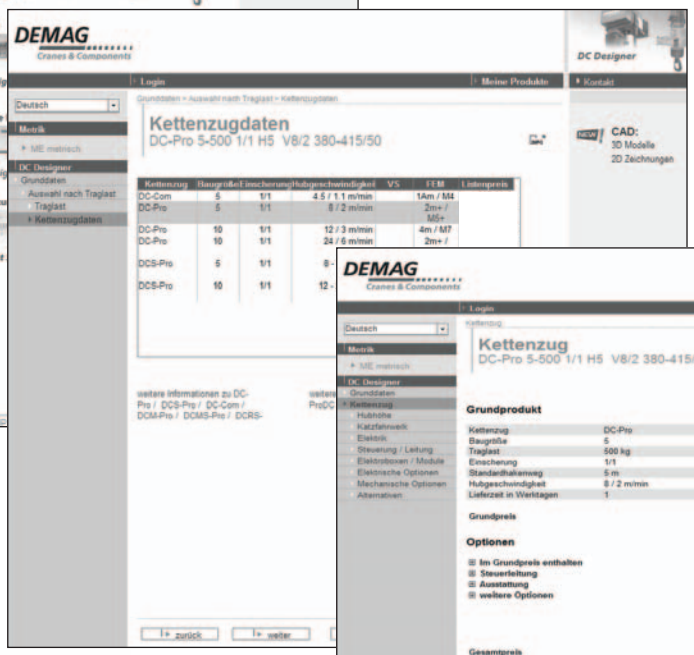

Product result

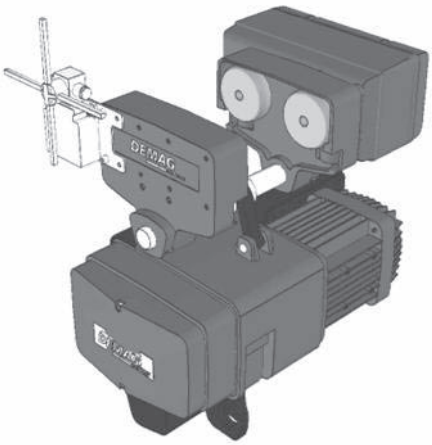

Configured 3D-CAD geometry selection

20352544.indd/180713

Project-drafting sheet for DC chain hoists

Contents

20352544.indd/180713

20352544.indd/180713

The metric system is used in this document and all figures are shown with a comma as the decimal separator.

1 Chain hoist

1.1 General

Lifting loads

↓

Demag DC-Pro chain hoists

↓

Perfect load handling

↓

The industrial standard made by Demag

High productivity, efficiency and operating reliability are the most important requirements to be met by state-of-the-art material flow systems. Demag Cranes & Components develops and produces innovative materials flow solutions for all industries and companies of all sizes, from small workshops to major industrial corporations.

All inclusive: Fully featured with no need for extras. Many features are already integrated into the Demag DC-Pro chain hoist as standard that have to be ordered and bought as extras elsewhere. The DC-Pro chain hoist is a fully equipped, highly versatile chain hoist, which can be installed and put into service in a minimum of time.

Certified

DC-Pro chain hoists satisfy the relevant provisions of

- EC Machinery Directive 2006/42/EC,
- EC Low Voltage Directive 2006/95/EC as well as
- EC EMC Directive 2004/108/EC.

Electromagnetic compatibility rated for interference immunity in industrial environments and for interference emissions in commercial and industrial environments.

In addition the chain hoists in an optional design meet the strict $_{C}CSA_{US}$ regulations for Canada and USA.

Safety-related functions:

For the safety-related functions specified in EN 14492-2, a performance level of at least PL = c is reached. This applies for the functions of the DC-Pro and DCS-Pro hoists (not DC/CC/FC):

- Emergency stop
- Lifting and lowering limiters
- Overload protection (from 1 t)

for the trolley according to EN 15011:

- Emergency stop
- Travel limiters (right/left)

and for tandem operation of two hoists by means of tandem box:

- Interlocking of the hoist units

20352544.indd/180713

Most important differences between the product ranges

	DCS-Pro (DCMS-Pro)	DC-Pro (DCM-Pro)	DC-Com	DC-ProDC / CC
Control, control voltage	Inverter, 24 V	Contactor, 24 V Tri-state signal transmission		Direct / conventional contactor
Group of mechanisms	1 Am to 4m		1 Am to 3m	See DC-Pro
Standard hoist speed up to 125 kg, [m/min]	0,15-30/30	8/2; 16/4; 24/6	8/2	
Standard hoist speed 160-500 kg, [m/min]	0,15-16/30; 0,08-8/15	8/2; 12/3; 16/4; 24/6	6/1,5; 4,4/1,1	
Standard hoist speed 630-2000 kg, [m/min]	0,04-4/7; 0,06-6/11; 0,11-12/22	4/1; 6/1,5; 8/2, 12/3; 24/6	4/1	
Standard hoist speed 2500-5000 kg, [m/min]	0,04-4/7 for 2500 kg	4/1; 6/1,5; 8/2	- - -	
Duty factor [CDF%]	60 (20 at vs_{min})	60 (40/20)	60 (40/20); 40 (25/15)	
Speed ratio	stepless 1:100	F4		
Hook path (standard) [m]	5; 8 (Manulift 2,8; 4,3)		4	See DC-Pro
Hook path (order-specific) [m]	> 8		> 4	
Type of enclosure: chain hoist, trolley	IP55, IP55			
Height-adjustable control pendant, plug connections	Yes, yes			No
Hook assembly	Pro		Com	See DC-Pro
Control pendant (can be fitted)	DSC, DSE, DSM, DSK, DST		DSC, DSE, DSK, DST	DSK, DST
Limit-switch cut-off for DC 1-10 1/1	Yes		Optional	Optional (lifting)
Limit-switch cut-off for DC 10 2/1 to DC 25	Yes			
Elapsed operating time counter	Yes (can be read from the outside)		Yes, under elec. equip. cover	No
Diagnosis interface	Yes (can be read from the outside)		Yes, under elec. equip. cover	No
Maintenance-free for up to 10 years: Gearbox, brake, slipping clutch	Yes (DC10–25 brake 5 years)		No	
Adjustable brake	not required			Yes
Speed monitoring	Yes			No
Regenerative braking main to 0 via creep speed	- - -	Yes		No
Wide voltage range input	Yes			Yes
Pro-Hub: V_{max} in partial load range	Yes	No		
Fast-to-slow cut-off	Yes	No		
V, acc., dec. parameters adjustable via control pendant	Yes	No		
Motor temperature monitoring	Yes	Optional		Optional
Electric equipment cover	Aluminium	Aluminium (DC16/25 plastic)	Plastic	Partly extended cover
Surface of aluminium components	Powder coating			

1.2 Product details at a glance

DC-Pro (2 hoist speeds)

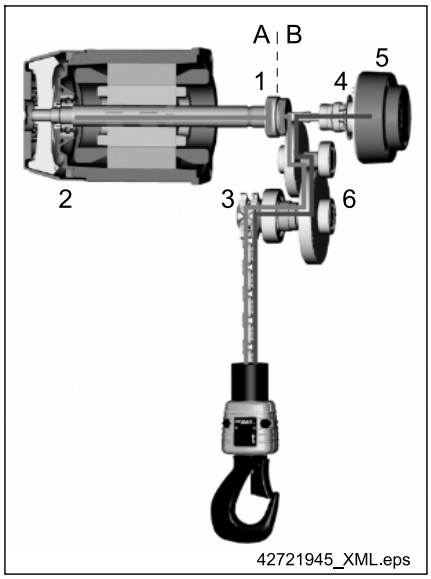

A	Drives	B	Brakes
1	Slipping clutch	4	Speed detection
2	Motor	5	Brake
3	Chain drive	6	Gearbox

The DC-Pro chain hoist standard scope of delivery already includes the following features:

- Load capacities up to 5000 kg, DCM-Pro Manulift up to 250 kg;
- FEM classification from 1Am to 4m (800 h – 6300 h duration of service in full load hours);
- 24 V contactor control with internal ‘tri-state’ signal transfer, can be extended with modules;
- Operating limit switches for the upper and lower hook position (a geared limit switch with 4 contacts for fast-to-slow and limit switch cut-off is fitted in DC-Pro 16-25 units);
- Elapsed operating time counter;
- Slipping clutch with automatic cut-out by means of speed monitoring (no continuous slipping);
- Gearbox, brake and slipping clutch maintenance-free for up to 10 years (DC-Pro 10-25 brake for up to 5 years);
- Height-adjustable control pendant:

  The control cable is available in 3 different lengths and is adjustable in height (H5: 0,8–3,8 m / H8: 3,8–6,8 m / H11: 6,8–9,8 m), enabling the position of the control pendant to be adjusted without the need for any wiring. The length of control cable that is not required is accommodated under the service cover;
- ‘Plug & Lift’ and ‘Plug & Drive’ for the electric connections:
  - Mains connection on the chain hoist;
  - Control cable on the chain hoist / control pendant;
  - Signal and power cable between the chain hoist and trolley;
- 7-segment display (visible through a window on the underside of the electric equipment cover) to read the operating hours and operating statuses;
- Infrared diagnostic interface (to read out and manage specific data by means of Demag IDAPSY software);
- Surface protection of the aluminium housing parts by UV-resistant powder coating (resistant to scratches);
- Two speeds with main lifting and creep lifting in F4 ratio;
- Various lifting speeds are available:

  4/1; 6/1,5; 8/2; 12/3; 16/4; 24/6 and variable speed up to 30 m/min;
- Duty factor: 60 % (40% / 20%), starts/h: 360 (120/240);
- Hoist motor to insulation class F;
- Chain hoist and travel drive: IP 55 type of enclosure.

Even longer service life, improved safety and reduced wear

- Slipping clutch hoist motor and brake monitored by means of integrated speed sensors;
- Low-wearing brake thanks to regenerative braking from main to creep lifting until standstill, mechanical braking from creep lifting to standstill;
- Brake adjustment is not necessary;
- The brake arranged before the slipping clutch prevents the load from slowly dropping when the unit is at rest;
- Automatic braking if the control system fails;
- Up to 1000 kg only 1/1 reeving: reduced chain wear, improved ergonomics;
- Robust cylindrical-rotor motor with fan and separate DC brake beneath the electrical cover (brake double encapsulated for enclosure type, no brake sticking),
- Suitable for tandem applications, meets requirements of standard for safety-relevant functions.

Simple commissioning and optimum ergonomics

- Ergonomic DSC / DSE control pendant with gentle actuation force;
- Length of the control cable or position of the control pendant individually adaptable on site without any need for wiring (can be extended or shortened at any time);
- Control cable and control board signals designed for 3-axis applications;
- Pivoting suspension bracket enables the chain hoist to be attached when the trolley has been fitted.

Service-friendly

- Elapsed operating time counter, status and error messages shown on 7-segment display;
- Infrared diagnostic interface (to read out and manage specific data by means of IDAPSY software);

Service cover: Everything in one place under the service cover – rapid access for commissioning and service:

- Plug-and-socket connections (for mains supply cable, control cable, limit switches, trolley connection);
- Strain relief (for power supply and trolley supply cables);
- Storage for 3 m of control cable;
- Chain drive (fitted to output shaft);
- Chain lubrication (through lubrication opening in the chain guide for improved lubrication between the link points of the chain on DC 1-10 hoists);
- Reduced downtimes as chain drive can be replaced without dismantling motor or gearbox parts.

DCM-Pro Manulift

- The DCM-Pro Manulift was developed for handling loads quickly and safely with only one hand.
- The DCM-Pro is based on the lifting unit of the DC-Pro chain hoist and the DSM-C control unit which is connected to it by a helical cable.
- Thanks to the control unit which is rigidly connected to the load handling attachment for right and left-handed operation, the operator only needs one hand to operate the chain hoist and guide the load.
- The quick-change coupling enables a wide variety of load handling attachments to be changed with ease:
  - All Manulift load handling attachments are fitted with a connecting pin with a swivel lock, which snaps into the quick-change coupling.
  - It can be easily disconnected by lifting the unlocking sleeve.
  - The universal coupling pin is used to connect customer-designed attachments.

DCMS-Pro, DCRS-Pro with infinitely variable lifting speed are distinguished by the control pendant switch or the control unit.

DCS-Pro
further benefits compared to DC-Pro

In comparison with the DC-Pro with two hoist speeds, the infinitely variable chain hoists offer further benefits:

- Frequency-inverter control with 24 V control voltage integrated into the chain hoist electric enclosure;
- Infinitely variable speed control for lifting and lowering motions over the entire load range;
- Gentle starting and precise positioning thanks to particularly fine control at low speeds;
- Gentle positioning and fast travel in one, thanks to a control ratio of max. 1:200 from the lowest to the fastest hoist speed;
- Pro-Hub function: Up to 90 % higher nominal speed for partial load or no-load operations;
- Automatic switchover to creep lifting speed before the upper/lower limit positions are reached;
- Smooth operation and optimum ergonomics thanks to the control unit with progressive characteristic of the PWM switching elements;
- Acceleration and braking ramps prevent significant load sway;
- Hoist speed, acceleration and braking ramp can be modified via the control unit;
- Increased safety by means of motor temperature monitoring as standard;
- Wide voltage range input 380 – 480 V / 50/60 Hz;
- Gearbox, brake and slipping clutch are maintenance-free for up to 10 years;
- If the DCS-Pro is used in combination with the E11 – E34 travel drive, trolley travel is automatically infinitely variable;
- Type of enclosure of the DCRS-Pro rocker switch: IP34.

Trolleys

- Trolley sizes 11, 22, 34, 56;
- Variable adjustment of trolley flange width up to 200 / 310 / 500 mm by means of adjusting rings;
- High travel performance with low wear thanks to universal travel rollers without a flange and lateral steel guide rollers;
- Integrated drop stop;
- Low travel noise and resistance;
- Die-cast aluminium, powder-coated;
- U11 - U34 with optional dual-output gearbox for two-wheel drive, for EU56 integrated as standard;
- Travel speeds: E11 / 22 up to 24/6 m/min (E22 with RF 125 up to 27 m/min), E34 up to 14 m/min, variable from 0,7 m/min
- E11 - E34: plug-in electric connections, smooth starting via ramps, load-sway damping can be activated for cross travel, inputs for travel limit switches integrated on the control board; speeds / acceleration / braking rates can be modified via the control unit;
- U11 - U34 also available with fitted three-phase AC ZBF motor and dual-output gearbox;
- EU56 travel speeds 12/4; 24/6; 40/10 m/min (with ZBF motor);
- Various trolley designs (stationary, RU or EU):
  - KDC low-headroom trolley;
  - KLDC low-headroom trolley for big-bag applications;
  - LDC-D / KLDC-D double chain hoist;
  - UDDC, KDDC articulated trolley.

20352544.indd/180713

DC-ProDC for direct control (2 hoist speeds)

DC-ProCC with conventional contactor control (2 hoist speeds)

- DC-ProDC can be connected direct to the line supply. Connection via terminal strip with GF brake module;
- Control via cable-connected DSK / DST control pendant optional (only DC 1-15);
- DC 16 - 25 control only without control pendant via installation control system;
- Slipping clutch and brake not maintenance-free;
- No elapsed operating time counter and service display;
- Lifting operating limit switch optional for DC 1-10 (DC 10 with ZNK 100 A motor);
- Lifting operating limit switch standard for DC 10-15 with ZNK 100 B motor;
- Geared limit switch as operating limit switch standard for DC 16-25;
- The slipping clutch is not monitored in the case of the DC-ProDC / CC.
- The gearboxes are maintenance-free for up to 10 years.

DC-ProFC for control via an external frequency inverter (infinitely variable hoist speed)

- DC-ProFC designed for connection to an external frequency inverter. The chain hoist features a 4-pole motor;
- DC-ProFC units are exclusively supplied without control unit as partly completed machinery with a declaration of incorporation (no CE declaration);
- Product selection is based on the same voltage ranges as for the DC-Pro, since the brake depends on the voltage. The motor is always rated for 360 V / 87 Hz;
- Microtherm (temperature contact) in motor available for evaluation;
- DC-ProFC units are always supplied with rotary encoders;
- The slipping clutch is not monitored in the case of the DC-ProFC;
- The gearboxes are maintenance-free for up to 10 years.

For control and speed control of the DC-ProFC we recommend the use of the Demag Dedrive Compact STO frequency inverter range.

1.3 Selection criteria

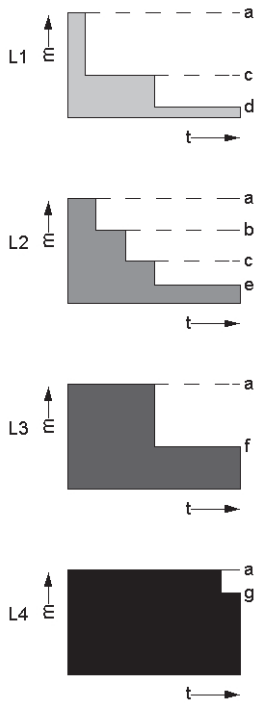

42699344.eps

m = SWL
t = Operating time
a = Full load
b = Medium partial load
c = Small to medium partial load
d = Small dead load
e = Small to medium dead load
f = Heavy dead load
g = Very heavy dead load

The size of the hoist is determined by the load spectrum, average operating time per working day, load capacity and reeving.

1. What are the operating conditions?
2. What is the specified safe working load?
3. To what height must the load be lifted?
4. What is the required lifting speed?
5. Do the loads need to be lifted and lowered with great accuracy?
6. Is horizontal load travel necessary?
7. How is the hoist to be controlled?

The load spectrum

(in most cases estimated) can be evaluated in accordance with the following definitions:

L1 light

Hoist units which are usually subject to very small loads and in exceptional cases only to maximum loads.

L2 medium

Hoist units which are usually subject to small loads but rather often to maximum loads.

L3 heavy

Hoist units which are usually subject to medium loads but frequently to maximum loads.

L4 very heavy

Hoist units which are regularly subject to maximum and almost maximum loads.

Example:

Load capacity	250 kg
Load spectrum from table	‘Medium’
Hoist speed	8 m/min
Reeving	1/1
Average hook path	4 m
No. of cycles/hour	20
Working time/day	8 hours

The average operating time per working day is estimated or calculated as follows:

$$\text{Operating time/day} = \frac{2 \times \text{average hook path} \times \text{no. of cycles/hour} \times \text{working time/day}}{60 \times \text{hoist speed}}$$

$$= \frac{2 \times 4 \times 20 \times 8}{60 \times 8}$$

$$= 2{,}66 \text{ hours}$$

For the medium load spectrum and an average daily operating time of 2,66 hours, the table shows group 2 m+. For a load capacity of 250 kg, the diagram shows size DC-Pro 2–250.

The chain hoist group of mechanisms is determined by the load spectrum and operating time.

Load spectrum		Average operating time per working day in hours			
L1	**Light**	2-4	4-8	8-16	over 16
L2	**Medium**	1-2	2-4	4-8	8-16
L3	**Heavy**	0,5-1	1-2	2-4	4-8
L4	**Very heavy**	0,25-0,5	0,5-1	1-2	2-4
Group of mechanisms to FEM 9511		1Am	2m+	3m	4m

Load capacity for reeving 1/1 [kg]	Load capacity for reeving 2/1 [kg]	Product range and FEM groups	Hoist speed at 50 Hz [m/min]				
80 / 100 / 125		DC-Pro 1	8/2				80
		DC-Pro 2	16/4				80
		DC-Pro 5	24/6				80
160		DC-Pro 2	8/2				160
		DC-Pro 5	16/4				160
		DC-Pro 5	24/6				160
200		DC-Pro 2	8/2			200	
		DC-Pro 5	16/4				200
		DC-Pro 10	24/6				200
250		DC-Pro 2	8/2		250		
250		DC-Pro 5	16/4				250
		DC-Pro 10	24/6				250
315		DC-Pro 5	8/2				315
		DC-Pro 10	12/3				315
		DC-Pro 10	24/6				315
400		DC-Pro 5	8/2			400	
		DC-Pro 10	12/3			400	
		DC-Pro 10	24/6			400	
500		DC-Pro 5	8/2		500		
		DC-Pro 10	12/3		500		
		DC-Pro 10	24/6		500		
630		DC-Pro 10	6/1,5				630
		DC-Pro 10	12/3				630
800		DC-Pro 10	6/1,5			800	
		DC-Pro 10	12/3			800	
1000		DC-Pro 10	6/1,5		1000		
		DC-Pro 15	8/2				1000
		DC-Pro 10	12/3		1000		
1250		DC-Pro 10	8/2	1250			
		DC-Pro 15	8/2			1250	
		DC-Pro 16	12/3			1250	
	1250	DC-Pro 10	6/1,5				1250
1600		DC-Pro 15	8/2		1600		
		DC-Pro 16	8/2		1600		
		DC-Pro 16	12/3		1600		
	1600	DC-Pro 10	6/1,5			1600	
2000		DC-Pro 25	8/2		2000		
	2000	DC-Pro 10	6/1,5		2000		
		DC-Pro 15	4/1				2000
2500		DC-Pro 25	8/2	2500			
		DC-Pro 10	4/1	2500			
	2500	DC-Pro 15	4/1			2500	
		DC-Pro 16	6/1,5			2500	
		DC-Pro 15	4/1		3200		
	3200	DC-Pro 16	4/1		3200		
		DC-Pro 16	6/1,5		3200		
	4000	DC-Pro 25	4/1		4000		
	5000	DC-Pro 25	4/1	5000			

1.4 Model code

E	K	L	D	DC-Pro	-D	10-	1000	X X X	H5	V6/1,5	2/4-	2000	380 - 415 /	50	24/6	200	220 - 480

- 220 - 480: Travel drive voltage range / voltage [V]
- 200: Max. flange width of the trolley [mm]
- 24/6: Travel speed [m/min]
- 50: Frequency [Hz]
- 380 - 415 /: Chain hoist voltage range [V]
- 2000: Load hook centre distance, double chain hoist
- 2/4-: Load hook run-off position, double chain hoist
- V6/1,5: Hoist speed [m/min]
  - V 2-stage = Main / creep lifting
  - VS Infinitely variable = VS at nominal load up to VS_{max} in the partial load range
- H5: Hook path [m]
- X X X: 1/1, 2/1 reeving
  - LDC-D 2x1/1; 2x2/1
  - KLDC-D 2/2-2; 4/2-2
- 1000: Total load capacity [kg]
- 10-: Size [1)]
- -D: Double chain hoist (2 chain lead-offs)
- DC-Pro:
  - **DC-Pro product range**
    - DC-Pro 2-stage chain hoist (Demag chain hoist)
    - DCM-Pro 2-stage Manulift
    - DCS-Pro Variable-speed chain hoist
    - DCMS-Pro Variable-speed Manulift
    - DCRS-Pro Variable-speed rocker switch
  - **DC-Pro product range**
    - DC-ProCC 2-stage chain hoist for conventional contactor control
    - DC-ProDC 2-stage chain hoist for direct control
    - DC-ProFC Variable-speed chain hoist for control by means of an external frequency inverter
  - **DC-Com product range**
    - DC-Com 2-stage chain hoist
- D: Articulated trolley
- L: Long trolley
- K: Low-headroom trolley
- U: Standard-headroom monorail hoist
- 11, 22, 34, 56: Trolley size load capacity [kg ● 100]
- R: Push-travel trolley
- E: Travel drive
- C F 5: Click-fit (push-travel trolley)

Not all features of the mounting code can be combined.

1) Since 04/2006, the designation for sizes DC 10 and DC 20 have been changed to DC 10 1/1 and DC 10 2/1 respectively.

20352544.indd/180713

1.5 DC-Pro documents

Documents		Ident. no.
Technical data / catalogues	Demag DC-Pro 1 – 25 chain hoist Demag DCS-Pro 1 – 15 chain hoist	203 525 44
	Demag DC-Com chain hoist	203 571 44
	CF5-DC/DCM trolley	203 568 44
	U11-U34/DC/DCM/DK trolley	203 569 44
	RU/EU56 trolley	203 691 44
	DC electrical accessories	203 656 44
	Polu-box electrical accessories	203 682 44
	KBK classic (steel, powder-coated)	202 976 44
	KBK Aluline (anodised)	203 245 44
	KBK trailing cable power supply	202 617 44
	KBK pillar-mounted and wall-mounted slewing jibs	203 565 44
	DCL-Pro compact conductor line	203 751 44
	Clamp-fitted buffer	203 313 44
Operating instructions / component parts	DC-Pro 1 - 15 chain hoist	214 741 44
	DC-Pro 16 - 25 chain hoist	211 033 44
	DC-Com chain hoist	214 802 44
	DCS-Pro chain hoist	214 827 44
	DC-Di chain hoist	211 068 44
	DC-ProDC/CC/FC 1-15 chain hoist	211 191 44
	DC-ProDC/CC/FC16-25 chain hoist	211 163 44
	DC-Wind chain hoist	211 010 44
	PGS parallel gripper	214 095 44
	DPM permanent magnet	206 623 44
Assembly instructions (Adjustment – Dimensions)	Encoders for Z motor range	214 372 44
	DCS-Pro braking resistor	211 166 44
	Dedrive Compact STO (quick-step instructions frequency inverter)	211 170 44
	DC double brake	211 217 44
	LDC-D double chain hoist	211 162 44
	KDDC/UDDC articulated trolley	211 159 44
	Limit switches	211 210 44
	DRF 200 travel drive	214 395 44
	E11-E34 DC (I) travel drive	214 810 44
	E11-E34 DC (II) travel drive (circuit diagrams)	211 229 44
	EU 11 DK trolley	206 604 44
	EU 22 DK trolley	206 605 44
	DRC-DC radio control system	214 689 44
	DRC-DC quick-step instructions	211 045 44
	DC geared limit switches	211 011 44
	DCM-Pro, DCMS-Pro, DKM, PM, PMV Manulift chain twist element	211 164 44
	KDC chain hoist	211 017 44
	DC protective sleeve	211 227 44
	ZNA, ZBA, ZBF motors	214 228 44
	Friction force checking device	206 973 44
	DC 1 - 25 safety hook	211 228 44
	DC PWM/3ST signal converter	211 094 44
	DCS analogue/PWM signal converter	214 951 44
	DSC-EX control pendant	214 832 44
	DSE10-C control pendant	214 998 44
	DC 1 - 25 tandem	211 108 44
	DSK+DST support sleeve	211 207 44
	VG11-34 EU11-34 dual-output gearbox	211 122 44
	Accessories long hook path	211 178 44
	DSC strain relief device	211 092 44
Test and inspection booklet	DC test and inspection booklet	214 745 44
	Certificates	235 309 44

The documents can be ordered from the relevant Demag office.

1.6 Design overview

Single-fall design, e.g. DC-Pro 5

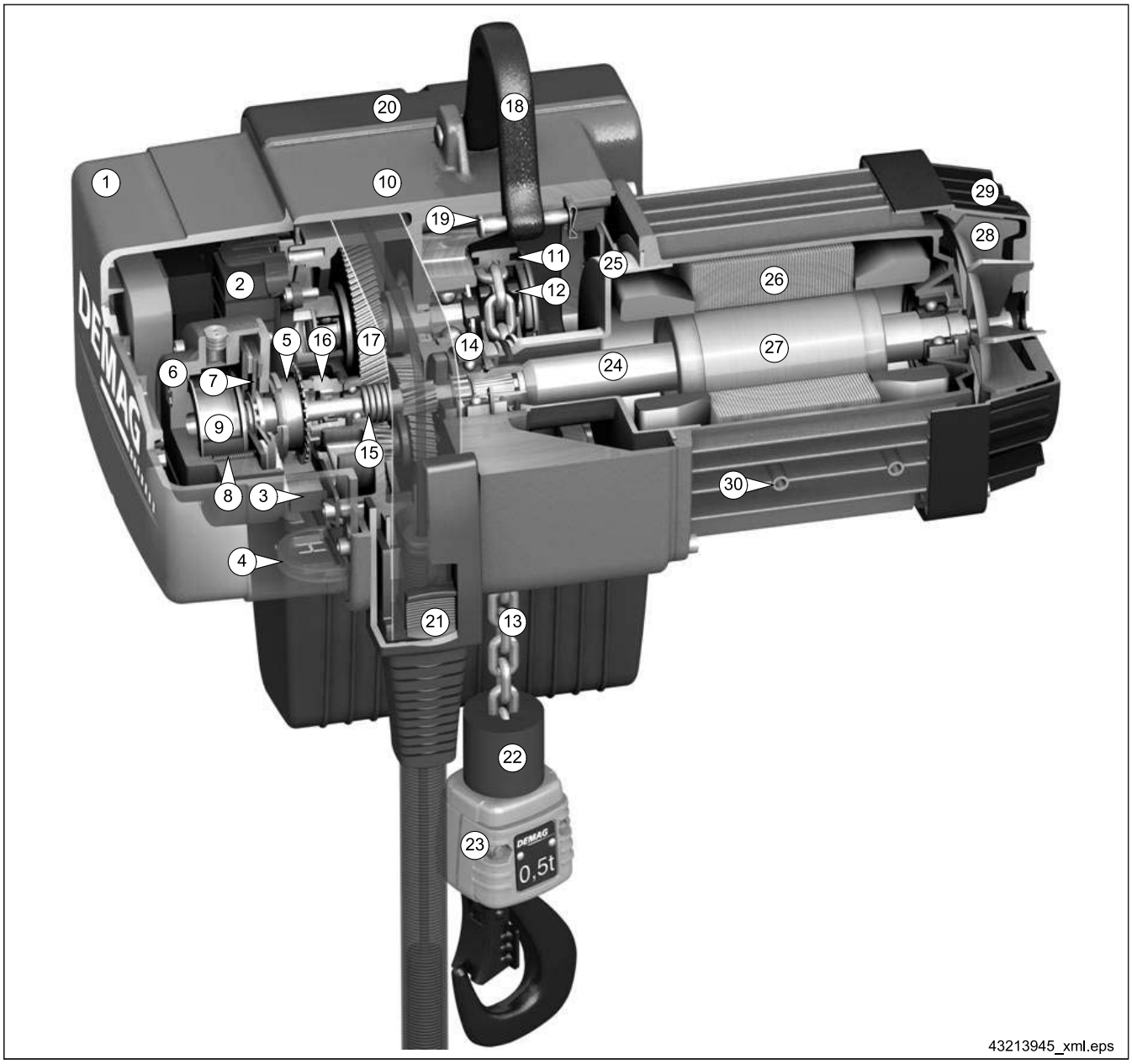

Item	Designation	Item	Designation	Item	Designation
1	Electric equipment cover	11	Chain guide	21	Adjusting mechanism for control cable
2	Control system	12	Chain sprocket	22	Cut-off buffer for operating limit switch
3	Elapsed operating time counter	13	Round section steel chain	23	Hook assembly with load capacity plate
4	Window	14	Slipping clutch	24	Motor shaft
5	Pulse wheel for speed monitoring	15	Dished washer pack	25	Winding head cap
6	Magnet brake	16	Slipping clutch adjusting nut	26	Stator
7	Brake disc with linings	17	DC 1 - 5 two-stage helical gearbox DC 10 and DC 15 three-stage helical gearbox	27	Rotor
8	Brake springs	18	Suspension bracket	28	Fan
9	Brake magnet	19	Suspension pin	29	Fan cover
10	Gearbox housing	20	Service cover	30	Mounting points

20352544.indd/180713

Two-fall design, e.g. DC-Pro 25

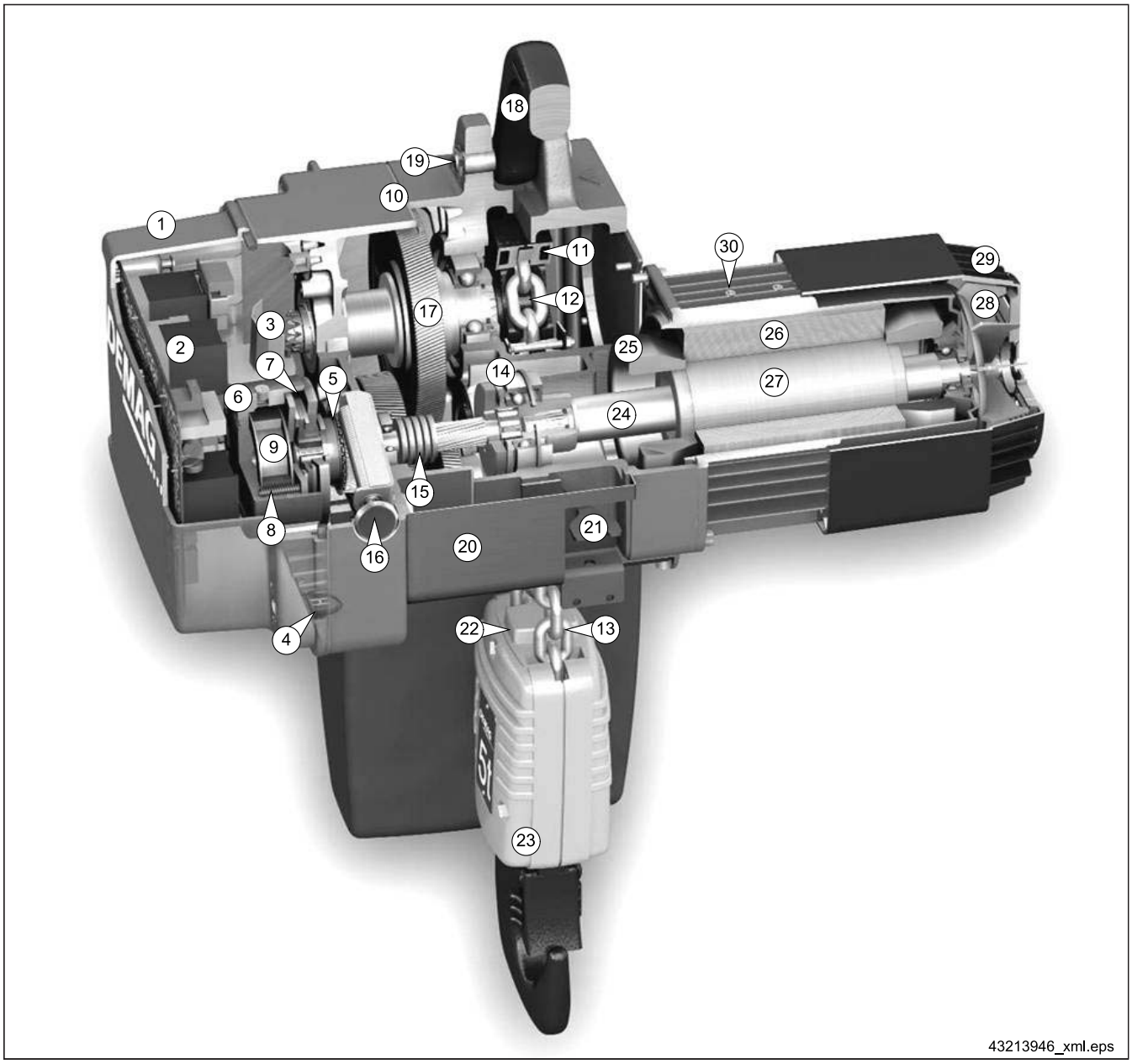

Item	Designation	Item	Designation	Item	Designation
1	Electric equipment cover	11	Chain guide	21	Adjusting mechanism for control cable
2	Control system	12	Chain sprocket	22	Cut-off buffer for operating limit switch
3	Geared limit switch	13	Round section steel chain	23	Bottom block with load capacity plate
4	Window	14	Slipping clutch	24	Motor shaft
5	Pulse wheel for speed monitoring	15	Dished washer pack	25	Winding head cap
6	Magnet brake	16	Slipping clutch adjusting screw	26	Stator
7	Brake disc with linings	17	DC 1 - 5 two-stage helical gearbox DC 10 - 25 three-stage helical gearbox	27	Rotor
8	Brake springs	18	Suspension bracket	28	Fan
9	Brake magnet	19	Suspension pin	29	Fan cover
10	Gearbox housing	20	Service cover	30	Mounting points

1.7 Selection tables

1.7.1 DC-Pro (2 hoist speeds)

Load capacity [kg]	Chain hoist size DC-Pro	Reeving	Group of mechanisms DIN EN 14492 FEM / ISO	Chain size [mm]	Hoist speed at 50 Hz [m/min]	Hoist speed at 60 Hz [m/min]	Standard hook path 1) H [m]	Motor size 2)	Max. weight for hook path 4 m [kg]	5 m [kg]	8 m [kg]
80	1	1/1	4m / M7	4,2x12,2	8,0/2,0	9,6/2,4	5 and 8	ZNK 71 A 8/2 3)	-	22	24
	2				16,0/4,0	19,2/4,8		ZNK 71 B 8/2			
	5			5,3x15,2	24,0/6,0 4)	28,8/7,2		ZNK 80 B 8/2		28	30
100	1			4,2x12,2	8,0/2,0	9,6/2,4		ZNK 71 A 8/2 3)		22	24
	2				16,0/4,0	19,2/4,8		ZNK 71 B 8/2			
	5			5,3x15,2	24,0/6,0 4)	28,8/7,2		ZNK 80 B 8/2		28	30
125	1			4,2x12,2	8,0/2,0	9,6/2,4		ZNK 71 A 8/2 3)		22	24
	2				16,0/4,0	19,2/4,8		ZNK 71 B 8/2			
	5			5,3x15,2	24,0/6,0 4)	28,8/7,2		ZNK 80 B 8/2		28	30
160	2			4,2x12,2	8,0/2,0	9,6/2,4		ZNK 71 B 8/2		22	24
	5			5,3x15,2	16,0/4,0	19,2/4,8		ZNK 80 B 8/2		28	30
					24,0/6,0 4)	28,8/7,2					
200	2		3m / M6	4,2x12,2	8,0/2,0	9,6/2,4		ZNK 71 B 8/2		22	24
	5		4m / M7	5,3x15,2	16,0/4,0	19,2/4,8		ZNK 80 B 8/2		28	30
	10			7,4x21,2	24,0/6,0 4)	28,8/7,2		ZNK 100 A 8/2		48	52
250	2		2m+ 5) / M5+	4,2x12,2	8,0/2,0	9,6/2,4		ZNK 71 B 8/2		22	24
	5		4m / M7	5,3x15,2	16,0/4,0	19,2/4,8		ZNK 80 B 8/2		28	30
	10			7,4x21,2	24,0/6,0 4)	28,8/7,2		ZNK 100 A 8/2		48	52
315	5			5,3x15,2	8,0/2,0	9,6/2,4		ZNK 80 B 8/2		28	30
	10			7,4x21,2	12,0/3,0	14,4/3,6		ZNK 100 A 8/2		48	52
					24,0/6,0 4)	28,8/7,2		ZNK 100 B 8/2		56	60
400	5		3m / M6	5,3x15,2	8,0/2,0	9,6/2,4		ZNK 80 B 8/2		28	30
	10		4m / M7	7,4x21,2	12,0/3,0	14,4/3,6		ZNK 100 A 8/2		48	52
			3m / M6		24,0/6,0 4)	28,8/7,2		ZNK 100 B 8/2		56	60
500	5		2m+ 5) / M5+	5,3x15,2	8,0/2,0	9,6/2,4		ZNK 80 B 8/2		28	30
	10		4m / M7	7,4x21,2	12,0/3,0	14,4/3,6		ZNK 100 A 8/2		48	52
			2m+ 5) / M5+		24,0/6,0 4)	28,8/7,2		ZNK 100 B 8/2		56	60
630			4m / M7		6,0/1,5	7,2/1,8		ZNK 100 A 8/2		48	52
					12,0/3,0	14,4/3,6		ZNK 100 B 8/2		56	60
800			3m / M6		6,0/1,5	7,2/1,8		ZNK 100 A 8/2		48	52
					12,0/3,0	14,4/3,6		ZNK 100 B 8/2		56	60
1000			2m+ 5) / M5+		6,0/1,5	7,2/1,8		ZNK 100 A 8/2		48	52
			2m+ 5) 6) / M5+		12,0/3,0	14,4/3,6		ZNK 100 B 8/2		56	60
	15		4m 7) / M7	8,7x24,2	8,0/2,0	9,6/2,4	4		71	72	77
1250	10	2/1	4m / M7	7,4x21,2	6,0/1,5	7,2/1,8	5 and 8		-	65	73
		1/1	1Am 8) / M4		8,0/2,0	9,6/2,4				56	60
	15		3m 7) / M6	8,7x24,2	8,0/2,0	9,6/2,4	4		71	72	77
	16		3m 6) / M6		12,0/3,0	14,4/3,6		ZNK 100 C 8/2	111	113	118
1600	10	2/1	3m / M6	7,4x21,2	6,0/1,5	7,2/1,8	5 and 8		-	65	73
	15	1/1	2m+ 5) 9) / M5+	8,7x24,2	8,0/2,0	9,6/2,4	4		71	72	77
	16		2m+ 5) 9) / M5+		8,0/2,0	9,6/2,4			103	105	110
			2m+ 5) 8) / M5+		12,0/3,0	14,4/3,6		ZNK 100 C 8/2	111	113	118
2000	10	2/1	2m+ 5) 6) / M5+	7,4x21,2	6,0/1,5	7,2/1,8	5 and 8		-	65	73
	15		4m 10) / M7	8,7x24,2	4,0/1,0	4,8/1,2	4		83	86	96
	25	1/1	2m+ 5) / M5+	10,5x28,2	8,0/2,0	9,6/2,4		ZNK 100 C 8/2	113	115	123

1) Larger hook paths on request.
2) See Electric key data page for key motor data.
3) ZNK 71 A 8/2 with 380-415 V / 50 Hz only for first delivery; a ZNK 71 B 8/2 motor is supplied for replacement requirements.
4) Only with operating limit switch for lifting; operating limit switch for lowering on request (the lower end position must not be approached in normal operation).
5) 2m+ corresponds to 1900 hours at full load.
6) Chain drive FEM 1Am according to EN 818-7
7) Chain drive FEM 2m according to EN 818-7
8) Chain drive FEM 1Cm according to EN 818-7
9) Chain drive FEM 1Bm according to EN 818-7
10) Chain drive FEM 3m according to EN 818-7

20352544.indd/180713

DC-Pro continued

Load capacity [kg]	Chain hoist size DC-Pro	Reeving	Group of mechanisms DIN EN 14492 FEM / ISO	Chain size [mm]	Hoist speed at 50 Hz [m/min]	Hoist speed at 60 Hz [m/min]	Standard hook path 1) H [m]	Motor size 2)	Max. weight for hook path 4 m [kg]	5 m [kg]	8 m [kg]
2500	10	2/1	1Am 7) / M4	7,4x21,2	4,0/1,0	4,8/1,2	5 and 8	ZNK 100 B 8/2	-	65	73
	15		3m / M6	8,7x24,2			4		83	86	96
	16		3m 8) / M6		6,0/1,5	7,2/1,8	4	ZNK 100 C 8/2	110	113	124
	25	1/1	1Am / M4	10,5x28,2	8,0/2,0	9,6/2,4			113	115	123
3200	15	2/1	2m+ 5) 8) / M5+	8,7x24,2	4,0/1,0	4,8/1,2		ZNK 100 B 8/2	83	86	96
	16		2m+ 5) 8) / M5+						110	113	124
			2m+ 5) 9) / M5+		6,0/1,5	7,2/1,8		ZNK 100 C 8/2			
4000	25		2m+ 5) / M5+	10,5x28,2	4,0/1,0	4,8/1,2			125	130	145
5000			1Am / M4								

DCM-Pro Manulift (2 hoist speeds)

Load capacity [kg]	Manulift size DCM-Pro	Reeving	Group of mechanisms DIN EN 14492 FEM / ISO	Chain size [mm]	Hoist speed at 50 Hz [m/min]	Hoist speed at 60 Hz [m/min]	Hook path H [m]	Motor size 2)	Max. weight for hook path 2,8 m [kg]	4,3 m [kg]
80	1	1/1	4m / M7	4,2x12,2	8,0/2,0	9,6/2,4	2,8 and 4,3	ZNK 71 A 8/2 3)	22	24
	2				16,0/4,0	19,2/4,8		ZNK 71 B 8/2		
	5			5,3x15,2	24,0/6,0 4)	28,8/7,2		ZNK 80 B 8/2	28	30
125	1			4,2x12,2	8,0/2,0	9,6/2,4		ZNK 71 A 8/2 3)	22	24
	2				16,0/4,0	19,2/4,8		ZNK 71 B 8/2		
	5			5,3x15,2	24,0/6,0 4)	28,8/7,2		ZNK 80 B 8/2	28	30
200	2		3m / M6	4,2x12,2	8,0/2,0	9,6/2,4		ZNK 71 B 8/2	22	24
	5		4m / M7	5,3x15,2	16,0/4,0	19,2/4,8		ZNK 80 B 8/2	28	30
250	2		2m+ 5) / M5+	4,2x12,2	8,0/2,0	9,6/2,4		ZNK 71 B 8/2	22	24
	5		4m / M7	5,3x15,2	16,0/4,0	19,2/4,8		ZNK 80 B 8/2	28	30

1) Larger hook paths on request.
2) See Electric key data page for key motor data.
3) ZNK 71 A 8/2 with 380-415 V / 50 Hz only for first delivery; a ZNK 71 B 8/2 motor is supplied for replacement requirements.
4) Only with operating limit switch for lifting; operating limit switch for lowering on request (the lower end position must not be approached in normal operation).
5) 2m+ corresponds to 1900 hours at full load.
6) Chain drive FEM 2m according to EN 818-7
7) Chain drive FEM 1Cm according to EN 818-7
8) Chain drive FEM 1Am according to EN 818-7
9) Chain drive FEM 1Bm according to EN 818-7
10) Chain drive FEM 3m according to EN 818-7

1.7.2 DCS-Pro (variable hoist speed)

Load capacity [kg]	Chain hoist size DC-Pro	Reeving	Group of mechanisms DIN EN 14492 FEM / ISO	Chain size [mm]	Hoist speed 1) at 50/60 Hz vs_{rated} [m/min]	Hoist speed 1) at 50/60 Hz vs_{max} [m/min]	Standard hook path 2) H [m]	Motor size 3)	Max. weight for hook path 4 m [kg]	Max. weight for hook path 5 m [kg]	Max. weight for hook path 8 m [kg]
80	1	1/1	4m / M7	4,2x12,2	0,15-30	30	5 and 8	ZNK 71 B 4	-	25	27
100											
125											
160	2				0,15-16						
200			3m / M6								
250			2m+ 4) / M5+								
315	5		4m / M7	5,3x15,2	0,08-8	15		ZNK 80 A 4		29	31
	10			7,4x21,2	0,11-12	22		ZNK 100 A 4		59	63
400	5		3m / M6	5,3x15,2	0,08-8	15		ZNK 80 A 4		29	31
	10		4m / M7	7,4x21,2	0,11-12	22		ZNK 100 A 4		59	63
500	5		2m+ 4) / M5+	5,3x15,2	0,08-8	15		ZNK 80 A 4		29	31
	10		4m / M7	7,4x21,2	0,11-12	22		ZNK 100 A 4		59	63
630					0,06-6	11				54	58
					0,11-12	22				59	63
800			3m / M6		0,06-6	11				54	58
					0,11-12	22				59	63
1000			2m+ 4) / M5+		0,06-6	11				54	58
			2m+ 4) 7) / M5+		0,11-12	22				59	63
	15		4m 5) / M7	8,7x24,2	0,08-8	15	4		74	75	80
1250	10		1Am 6) / M4	7,4x21,2	0,04-4	7	5 and 8		-	54	58
		2/1	4m / M7		0,06-6	11				68	72
	15	1/1	3m 7) / M6	8,7x24,2	0,08-8	15	4		74	75	80
1600	10	2/1	3m / M6	7,4x21,2	0,06-6	11	5 and 8		-	68	72
	15	1/1	2m+ 4) 8) / M5+	8,7x24,2	0,08-8	15	4		74	75	80
2000	10	2/1	2m+ 4) 7) / M5+	7,4x21,2	0,06-6	11	5 and 8		-	68	72
	15		4m 9) / M7	8,7x24,2	0,04-4	7	4		86	89	99
2500	10		1Am 6) / M4	7,4x21,2			5 and 8		-	68	72
	15		3m 5) / M6	8,7x24,2			4		86	89	99
3200			2m+ 4) 7) / M5+								

DCMS-Pro Manulift (variable hoist speed)

Load capacity [kg]	Manulift size DCMS-Pro	Reeving	Group of mechanisms DIN EN 14492 FEM / ISO	Chain size [mm]	Hoist speed 1) at 50/60 Hz vs_{rated} [m/min]	Hoist speed 1) at 50/60 Hz vs_{max} [m/min]	Hook path H [m]	Motor size 3)	Max. weight for hook path 2,8 m [kg]	Max. weight for hook path 4,3 m [kg]
80	1	1/1	4m / M7	4,2x12,2	0,15-30	30	2,8 and 4,3	ZNK 71 B 4	25	27
125										
200	2		3m / M6		0,15-16					
250			2m+ 4) / M5+							

DCRS-Pro rocker switch (variable hoist speed)

Load capacity [kg]	Manulift size DCRS-Pro	Reeving	Group of mechanisms DIN EN 14492 FEM / ISO	Chain size [mm]	Hoist speed 1) at 50/60 Hz vs_{rated} [m/min]	Hoist speed 1) at 50/60 Hz vs_{max} [m/min]	Hook path H [m]	Motor size 3)	Max. weight for hook path 2,8 m [kg]	Max. weight for hook path 4,3 m [kg]
80	1	1/1	4m / M7	4,2x12,2	0,15-30	30	2,8 and 4,3	ZNK 71 B 4	25	27
125										
200	2		3m / M6		0,15-16					
250			2m+ 4) / M5+							

1) ● vs_{min} corresponds to a control ratio vs_{min} : vs_{max} of 1 : 200 (factory setting 1 : 100)
● vs_{max}, vs_{rated}, vs_{min}, acceleration time and deceleration time can also be changed by setting parameters with the control unit (see 'DCS-Pro chain hoist operating instructions')
● Max. hoist speed in the partial load range / without load
● For DCS-Pro 1, DCMS-Pro 1, DCRS-Pro 1 units, the max. lowering speed corresponds to 78% of vs_{rated}

2) Larger hook paths on request.
3) See Electric key data page for key motor data.
4) 2m+ corresponds to 1900 hours at full load.
5) Chain drive FEM 2m according to EN 818-7
6) Chain drive FEM 1Cm according to EN 818-7
7) Chain drive FEM 1Am according to EN 818-7
8) Chain drive FEM 1Bm according to EN 818-7
9) Chain drive FEM 3m according to EN 818-7

20352544.indd/180713

1.7.3 DC-ProFC (variable hoist speed) for control by means of an external frequency inverter

Load capacity [kg]	Chain hoist size DC-ProFC	Reeving	Group of mechanisms DIN EN 14492 FEM / ISO	Chain size [mm]	Hoist speed at 87 Hz vs_{rated} 1) [m/min]	Gearbox transmission ratio i	Standard hook path H 2) [m]	Motor size 3)	Max. weight for hook path 4 m [kg]	5 m [kg]	8 m [kg]
80	1	1/1	4m / M7	4,2x12,2	16,0	25,566	5 and 8	ZNK 71 B 4	-	25	27
100											
125											
160	2										
200			3m / M6								
250			2m+ 4) / M5+								
315	5		4m / M7	5,3x15,2	8,0	54,241		ZNK 80 A 4		30	32
	10			7,4x21,2	12,0	53,073		ZNK 100 A 4		50	54
400	5		3m / M6	5,3x15,2	8,0	54,241		ZNK 80 A 4		30	32
	10		4m / M7	7,4x21,2	12,0	53,073		ZNK 100 A 4		50	54
500	5		2m+ 4) / M5+	5,3x15,2	8,0	54,241		ZNK 80 A 4		30	32
	10		4m / M7	7,4x21,2	12,0	53,073		ZNK 100 A 4		50	54
630					6,0	100,154					
					12,0	53,073					
800			3m / M6		6,0	100,154					
					12,0	53,073					
1000			2m+ 4) / M5+		6,0	100,154					
			2m+ 4) 7) / M5+		12,0	53,073					
	15		4m 5) / M7	8,7x24,2	8,0	91,678	4		73	74	79
1250	10		1Am 6) / M4	7,4x21,2	4,0	100,154	5 and 8		-	58	62
		2/1	4m / M7		6,0	75,672				67	75
	15	1/1	3m 7) / M6	8,7x24,2	8,0	91,678	4		73	74	79
1600	10	2/1	3m / M6	7,4x21,2	6,0	53,073	5 and 8		-	67	75
	15	1/1	2m+ 4) 8) / M5+	8,7x24,2	8,0	91,678	4		73	74	79
2000	10	2/1	2m+ 4) 7) / M5+	7,4x21,2	6,0	53,073	5 and 8		-	67	75
	15		4m 9) / M7	8,7x24,2	4,0	91,678	4		85	88	98
2500	10		1Am 6) / M4	7,4x21,2		75,672	5 and 8		-	67	75
	15		3m 5) / M6	8,7x24,2		91,678	4		85	88	98
3200			2m+ 4) 7) / M5+								

Further special features

The hoist speeds specified for the DC-ProFC are nominal hoist speeds. Higher hoist speeds for partial load and/or in the field weakening range depend on the inverter provided by the customer. The max. hoist speed vs_{max} is reached at 5000 rpm. Note load reduction owing to field weakening.

Chain sprocket pitch circle diameter d_k:

DC 1 - 2	DC 5	DC 10	DC 15	DC 16	DC 25
46,601	48,383	67,482	77,031	92,437	89,763

$$\text{Increments per mm lifting movement} = \frac{\text{Increments rotary encoder} \times i_{gearbox}}{d_k \times \pi}$$

The precise hoist speed must be calculated according to the following equation:

$$v_H = \frac{d_k \times \pi \times n_{mot}}{i_{gearbox} \times 1000}$$

For control of the DC-ProFC, an appropriate encoder is required. An incremental encoder is fitted as standard. See also section ‘Pulse generator fitting’. Other encoders on request.

For control and speed control of the DC-ProFC we recommend the use of the Demag frequency inverter range Dedrive Compact STO.

1) For vs_{max} at max. 5000 rpm in field-weakening operation note load reduction owing to field weakening.
2) Larger hook paths on request.
3) See Electric key data page for key motor data.
4) 2m+ corresponds to 1900 hours at full load.
5) Chain drive FEM 2m according to EN 818-7
6) Chain drive FEM 1Cm according to EN 818-7
7) Chain drive FEM 1Am according to EN 818-7
8) Chain drive FEM 1Bm according to EN 818-7
9) Chain drive FEM 3m according to EN 818-7

1.7.4 DC-ProDC for direct control, DC-ProCC (in preparation) for conventional contactor control (2 hoist speeds)

Load capacity [kg]	Chain hoist size DC-ProDC DC-ProCC	Reeving	Group of mechanisms DIN EN 14492 FEM / ISO	Chain size [mm]	Hoist speed at 50 Hz [m/min]	Hoist speed at 60 Hz [m/min]	Standard hook path 1) H [m]	Motor size 2)	Max. weight for hook path 4) 4 m [kg]	5 m [kg]	8 m [kg]
80	1	1/1	4m / M7	4,2x12,2	8,0/2,0	9,6/2,4	5 and 8	ZNK 71 A 8/2 3)	-	22	24
	2				16,0/4,0	19,2/4,8		ZNK 71 B 8/2			
	5			5,3x15,2	24,0/6,0	28,8/7,2		ZNK 80 B 8/2		28	30
100	1			4,2x12,2	8,0/2,0	9,6/2,4		ZNK 71 A 8/2 3)		22	24
	2				16,0/4,0	19,2/4,8		ZNK 71 B 8/2			
	5			5,3x15,2	24,0/6,0	28,8/7,2		ZNK 80 B 8/2		28	30
125	1			4,2x12,2	8,0/2,0	9,6/2,4		ZNK 71 A 8/2 3)		22	24
	2				16,0/4,0	19,2/4,8		ZNK 71 B 8/2			
	5			5,3x15,2	24,0/6,0	28,8/7,2		ZNK 80 B 8/2		28	30
160	2			4,2x12,2	8,0/2,0	9,6/2,4		ZNK 71 B 8/2		22	24
	5			5,3x15,2	16,0/4,0	19,2/4,8		ZNK 80 B 8/2		28	30
					24,0/6,0	28,8/7,2					
200	2		3m / M6	4,2x12,2	8,0/2,0	9,6/2,4		ZNK 71 B 8/2		22	24
	5		4m / M7	5,3x15,2	16,0/4,0	19,2/4,8		ZNK 80 B 8/2		28	30
	10			7,4x21,2	24,0/6,0	28,8/7,2		ZNK 100 A 8/2		48	52
250	2		2m+ 5) / M5+	4,2x12,2	8,0/2,0	9,6/2,4		ZNK 71 B 8/2		22	24
	5		4m / M7	5,3x15,2	16,0/4,0	19,2/4,8		ZNK 80 B 8/2		28	30
	10			7,4x21,2	24,0/6,0	28,8/7,2		ZNK 100 A 8/2		48	52
315	5			5,3x15,2	8,0/2,0	9,6/2,4		ZNK 80 B 8/2		28	30
	10			7,4x21,2	12,0/3,0	14,4/3,6		ZNK 100 A 8/2		48	52
					24,0/6,0	28,8/7,2		ZNK 100 B 8/2		56	60
400	5		3m / M6	5,3x15,2	8,0/2,0	9,6/2,4		ZNK 80 B 8/2		28	30
	10		4m / M7	7,4x21,2	12,0/3,0	14,4/3,6		ZNK 100 A 8/2		48	52
			3m / M6		24,0/6,0	28,8/7,2		ZNK 100 B 8/2		56	60
500	5		2m+ 5) / M5+	5,3x15,2	8,0/2,0	9,6/2,4		ZNK 80 B 8/2		28	30
	10		4m / M7	7,4x21,2	12,0/3,0	14,4/3,6		ZNK 100 A 8/2		48	52
			2m+ 5) / M5+		24,0/6,0	28,8/7,2		ZNK 100 B 8/2		56	60
630			4m / M7		6,0/1,5	7,2/1,8		ZNK 100 A 8/2		48	52
					12,0/3,0	14,4/3,6		ZNK 100 B 8/2		56	60
800			3m / M6		6,0/1,5	7,2/1,8		ZNK 100 A 8/2		48	52
					12,0/3,0	14,4/3,6		ZNK 100 B 8/2		56	60
1000			2m+ 5) / M5+		6,0/1,5	7,2/1,8		ZNK 100 A 8/2		48	52
			2m+ 5) 6) / M5+		12,0/3,0	14,4/3,6		ZNK 100 B 8/2		56	60
	15		4m 7) / M7	8,7x24,2	8,0/2,0	9,6/2,4	4		71	72	77
1250	10	2/1	4m / M7	7,4x21,2	6,0/1,5	7,2/1,8	5 and 8		-	65	73
		1/1	1Am 8) / M4		8,0/2,0	9,6/2,4				56	60
	15		3m 7) / M6	8,7x24,2	8,0/2,0	9,6/2,4	4		71	72	77
	16		3m 6) / M6		12,0/3,0	14,4/3,6		ZNK 100 C 8/2	111	113	118
1600	10	2/1	3m / M6	7,4x21,2	6,0/1,5	7,2/1,8	5 and 8	ZNK 100 B 8/2	-	65	73
	15	1/1	2m+ 5) 9) / M5+	8,7x24,2	8,0/2,0	9,6/2,4	4		71	72	77
	16		2m+ 5) 8) / M5+		12,0/3,0	14,4/3,6		ZNK 100 C 8/2	111	113	118
2000	10	2/1	2m+ 5) 6) / M5+	7,4x21,2	6,0/1,5	7,2/1,8	5 and 8	ZNK 100 B 8/2	-	65	73
	15		4m 10) / M7	8,7x24,2	4,0/1,0	4,8/1,2	4		83	86	96
	25	1/1	2m+ 5) / M5+	10,5x28,2	8,0/2,0	9,6/2,4		ZNK 100 C 8/2	113	115	123

1) Larger hook paths on request.
2) See Electric key data page for key motor data.
3) ZNK 71 A 8/2 with 380-415 V / 50 Hz only for first delivery; a ZNK 71 B 8/2 motor is supplied for replacement requirements.
4) The DC-ProCC weighs approx. 3 kg more.
5) 2m+ corresponds to 1900 hours at full load.
6) Chain drive FEM 1Am according to EN 818-7
7) Chain drive FEM 2m according to EN 818-7
8) Chain drive FEM 1Cm according to EN 818-7
9) Chain drive FEM 1Bm according to EN 818-7
10) Chain drive FEM 3m according to EN 818-7

20352544.indd/180713

DC-ProDC, DC-ProCC continued

Load capacity [kg]	Chain hoist size DC-Pro	Reeving	Group of mechanisms DIN EN 14492 FEM / ISO	Chain size [mm]	Hoist speed at 50 Hz [m/min]	Hoist speed at 60 Hz [m/min]	Standard hook path 1) H [m]	Motor size 2)	Max. weight for hook path 4 m [kg]	5 m [kg]	8 m [kg]
2500	10	2/1	1Am 7) / M4	7,4x21,2	4,0/1,0	4,8/1,2	5 and 8	ZNK 100 B 8/2	-	65	73
	15		3m / M6	8,7x24,2			4		83	86	96
	16		3m 8) / M6		6,0/1,5	7,2/1,8	4	ZNK 100 C 8/2	110	113	124
	25	1/1	1Am / M4	10,5x28,2	8,0/2,0	9,6/2,4			113	115	123
3200	15	2/1	2m+ 5) 8) / M5+	8,7x24,2	4,0/1,0	4,8/1,2		ZNK 100 B 8/2	83	86	96
	16		2m+ 5) 9) / M5+		6,0/1,5	7,2/1,8		ZNK 100 C 8/2	110	113	124
4000	25		2m+ 5) / M5+	10,5x28,2	4,0/1,0	4,8/1,2			125	130	145
5000			1Am / M4								

Further special features for DC-ProDC for direct control

Chain hoist size	DC-Pro 1	DC-Pro 2	DC-Pro 5	DC-Pro 10			DC-Pro 15	
Load capacity [kg]	≤ 125	≤ 250	≤ 500	≤ 1000	≤ 1250	≤ 2500	≤ 1600	≤ 3200
Reeving	1/1					2/1	1/1	2/1
Motor size	ZNK 71 A 8/2	ZNK 71 B 8/2	ZNK 80 B 8/2	ZNK 100 A 8/2	ZNK 100 B 8/2	ZNK 100 B 8/2	ZNK 100 B 8/2	ZNK 100 B 8/2
Intermediate flange thickness [mm]	110			90				
Operating limit switch for lifting	- Standard without operating limit switch for lifting - Option with operating limit switch for lifting				- Standard with operating limit switch for lifting - Option without operating limit switch for lifting (The operating limit switch is not needed in chain hoists for customer-designed installation control systems which include a corresponding limit cut-off arrangement.)			
Intermediate flange	- Standard without intermediate flange - Option with intermediate flange				- Standard with intermediate flange		- Standard with intermediate flange - For option with operating limit switch for lifting without intermediate flange	
Counterweight	- For option with intermediate flange with counterweight fitting on the motor			- No counterweight				

- For the ‘lifting’ operating limit switch option, the electric equipment cover is extended by an intermediate flange;
- The max. line voltage with the control unit connected is 500 V;
- External control with GF brake module is possible up to 500 V;
- Braking from main lifting to 0 only mechanical;
- DC 5 - 15 brake adjustable, brake assignment partly differs from DC-Pro standard.

Travel against the upper/lower limit position in normal operation and tripping of the slipping clutch caused by this is not permitted. If it is necessary to approach the upper limit position in normal operation, the chain hoist must be fitted with an operating limit switch.

1) Larger hook paths on request.
2) See Electric key data page for key motor data.
5) 2m+ corresponds to 1900 hours at full load.
7) Chain drive FEM 1Cm according to EN 818-7
8) Chain drive FEM 1Am according to EN 818-7
9) Chain drive FEM 1Bm according to EN 818-7

1.8 Operating conditions

1.8.1 General operating conditions

The chain hoist and the trolley can be operated at:

Ambient temperature:	-20 °C to +45 °C
Humidity:	max. 80% relative humidity
Height:	up to 1000 m above sea level
Type of enclosure:	IP55
Electromagnetic compatibility:	Immunity for industrial environments Emission standard for residential, commercial and light-industrial environments

Surface protection and paint finish

As standard, the chain hoist is provided with corrosion protection (powder coating / paint finish) and supplied in the following colours:

Paint finish		
Chain hoist, trolley	RAL 5009	Azure blue
Hook assembly	RAL 1007	Daffodil yellow
Load hook and suspension bracket	RAL 9005	Jet black

The chain hoist or trolley can be supplied with other paint finishes.

Noise emission / sound pressure level

Sound pressure level (LpAF) according to DIN 45635 at a distance of 1 m from the chain hoist is:

Chain hoist size		**DC-Pro 1**	**DC-Pro 2**	**DC-Pro 5**	**DC-Pro 10**	**DC-Pro 15 / 16 / 25**
Hoist speed up to	[m/min]	8	16	12	12	8
Sound pressure level	[dB (A)]	65^{+2}		69^{+2}		

Demag chain hoists operating outdoors should be provided with a cover for protection against the weather or chain hoists, trolleys and travel drives should be kept under shelter if they are not in use.

Special operating conditions may be agreed with the manufacturer in individual cases.

Such operating conditions may occur in the following applications, for example:

- galvanising, electroplating facilities, foundries, pickling plants,
- hygiene areas, clean rooms,
- low or high temperature applications, offshore.

On request, suitably optimised equipment and important information for safe, low-wear operation can be supplied for these applications.

Cut-off springs need to be used under certain ambient conditions:

- DC1-10 with 1/1 reeving hook assembly – use of cut-off springs (optional)
  - for very high mechanical demands on the buffers, e.g. frequent contact with sharp edges,
  - for extreme ambient conditions (hot atmospheres, foundries, galvanising plants, etc.).
- DC 10 2/1 reeving: DK10 aluminium bottom block with external cut-off springs (optional)
  - for extreme ambient conditions (hot atmospheres, foundries, galvanising plants, etc.).
- DC 15 hook assembly/bottom block of aluminium as standard with external cut-off springs.

20352544.indd/180713

1.8.2 Increased ambient temperature

If DC chain hoists are operated at ambient temperatures that differ from the above-listed values, the duty factor must be reduced (temperatures > 60° C on request):

Ambient temperature [°C]	-20 to +40	> +40 to +45	> +45 to +50	> +50 to +55	> +55 to +60
Chain hoist range	Specification of the duty factor in % for creep lifting and main lifting or V_{rated} - V_{max} for infinitely variable speed, value in brackets for V_{min}				
DC-Pro / DC-ProDC / DC-ProCC / DCM-Pro / DC-Com 1	20 / 40		15 / 35	15 / 25	10 / 20
DC-Com 2-10	15 / 25		15 / 25	10 / 20	5 / 15
DCS-Pro / DC-ProFC / DCMS-Pro / DCRS-Pro	(20) / 60	(15) / 45	(10) / 30	(5) / 15	-
Trolleys with ZBF motor 8/2	40 / 40	25 / 40			
Trolleys with ZBF motor 12/4	15 / 40	On request			
E11 - E34	20 / 40	15 / 35	> +45 °C U11 to RU56 with ZBF motor and Polu-box		

1.8.3 Special ambient / operating conditions

1.8.3.1 Outdoor operation

DC chain hoists, U11 - U34 as well as RU / EU56 trolleys and E11 - E34 travel drives are suitable for outdoor operation without any special equipment.

- Hoist and travel motor type of enclosure IP 55 (EU56 IP54 as standard, optional IP55).

The DC chain hoist is fitted with a brake extremely well protected against corrosion, a chromium-plated brake surface is therefore not necessary. The brake has type of enclosure IP 55 and is fitted under the electrical cover which also has IP 55 type of enclosure.

1.8.3.2 Galvanising facility design

DC-Pro chain hoists may be operated in galvanising facilities (pickling, electroplating facilities), depending on the ambient conditions the following special measures have to be considered:

Measures for galvanising facility design:

- Chain with increased corrosion protection type CORRUD, lubricated with acid-resistant chain grease,
- Replace standard height-adjustable control cable by DC support sleeve or 2TY control cable,
- Replace DSC/DSC-S or DSE-10C/S control pendants by DSK-C/S or DST-C/S,
- Corrosion protection by means of appropriate paint finish for ZBF travel motors (all powder-coated components / hoist motors need no additional protection),
- Use chain collector for the next larger size (only for H5 to H8),
- Replace cut-off buffer by cut-off spring,
- For DC 10 2/1, replace standard bottom block by DK 10 bottom block with steel cut-off springs,
- Use steel travel rollers for U11 trolleys (spheroidal-graphite cast iron standard for U22-56).

Optional measures:

- in the case of soiled travel tracks for U11 - U34, use the dual-output gearbox or a second travel drive,
- additional corrosion protection by means of appropriate paint finish for all components,
- use of a control pendant jib to keep the control pendant away from aggressive media.

1.8.3.3 Foodstuffs design

Chain hoists used in the foodstuffs sector must be operated with special lubricants that are suitable for foodstuffs application.

The chain can be lubricated with lubricant Paraliq 91 (make Klueber).

The load capacity of DC chain hoists with gear oil suitable for foodstuffs applications is max. 800 kg owing to the changed setting of the slipping clutch. For load capacities higher than 800 kg, an additional electronic device is required for each ZMS.

Optional:

As an option, the chain hoists can be provided with a two-component paint finish (e.g. RAL 9010 pure white) and an RS 6 stainless steel chain. Pay attention to the reduced load capacity of the RS 6 stainless steel chain!

Chain hoist size	DC 1/2	DC 5	DC 10	DC 15	DC 16 - 25
Gearbox quantity in litres	0,35	0,5	0,9	1,3	3
Gear oil (Klueber 4 UH1-220)					
Chain spray (Klueber Paraliq 91) spray can part no. 180 002 98					

1.8.3.4 Clean room design

In some technical sectors, for example, electronics, precision mechanics and medicine, special clean air requirements are made. It is intended to exclude any detrimental effect of pollution at a clean workplace on the object to be handled or on persons.

In accordance with DIN EN ISO 14644-1, clean rooms are assigned to cleanness classes according to the quantity of particles contained in the air. The following table shows a comparison of the cleanness classes of various standards:

	DIN EN ISO 14644-1 (VDI 2083 of 2005)	EG – GMP guideline	US Fed. Std. 209E	VDI 2083 of 1995 (obsolete)
Not possible with chain hoists	Class 6		M4,5 (1000)	Class 4
Only possible with special measures	Class 7	C	M5,5 (10 000)	Class 5
For DC chain hoist without special measures	Class 8	D	M6,5 (100 000)	Class 6

The clean air classes are determined by measuring the concentration of particles. They are considered to be fulfilled, if the measured concentration of particles shows values below the specified limit concentration for each of the specified particle sizes.

Particles may occur in solid or liquid form. In the case of particularly sensitive processes, exhalations of, for example, greases used during the production process of individual components may cause detrimental effects. Clean room requirements may be made, for example, in the optical industry, for metallization of gold layers or coating of optical lenses.

Hoist units and trolleys for clean rooms must be specified and manufactured so that during their operation no particles can be emitted. This applies in particular to avoiding particle formation by abrasion, corrosion or vibration.

Owing to the double enclosure of the brake for the DC, cleanness class ISO 8 can be achieved without any special measures. Cleanness class ISO 6 **cannot** be achieved with chain hoists.

To obtain cleanness class ISO 7 with the DC-Pro chain hoist, the following special measures are necessary:

20352544.indd/180713

Clean room design	DC 1/2	DC 5	DC 10 (1/1) up to 1000 kg	DC 10 (2/1)	DC15	DC 16 - 25 (1/1, 2/1)
2-comp. Hydro-varnish paint finish stationary or with trolley						
Motor fan cover no varnish (standard)						
Load hook nickel-plated						
Suspension bracket nickel-plated						
Plastic travel rollers standard for U11 trolley				On request		
The standard height-adjustable control cable must be replaced by the support sleeve.						
Optional measures: Oil grease collector tray under chain hoist / trolley						

Explanations:

- Preservation of blank parts not necessary,
- Plastic parts have no varnish,
- Load hook / suspension bracket are nickel-plated, not bronze-coated. With bronze coating, the surface might have a rough character. There is a risk of particles flaking off.
- For U11 trolleys with E11 travel drives, no special measures are necessary owing to the plastic travel wheels and the direct drive. **The travel profile must not be varnished, since otherwise abrasion may occur.**
- Oil grease collector trays are not absolutely necessary for maintenance operation, must be provided for production operation, however.

1.8.3.5 Handling molten masses with DC-Pro chain hoists

The following measures must be taken in accordance with EN14492-2:

The load capacity of the hoist unit must be 50% higher than the total load to be lifted, i.e. ‘2/3 rule’.

Rated load capacity mH [t]	5	3,2	2,5	2	1
Reduced load capacity mHn [t] for molten materials	3,2	2	1,6	1,3	0,65

Example:

For an SWL of 3.200 kg, the hoist unit must be able to lift 50% more SWL (50% of 3.200 kg = 1.600 kg), i.e. 4.800 kg (next SWL step is 5.000 kg).

Chain drive	The chain drive must be rated at least for FEM group 2m/M5.
Electric equipment	A crane switch contactor must be provided.
Overload protection	The slipping clutch serves as a direct acting overload protection. A ZMS is not required.
Motor	The duty factor CDF and the switching frequency must be reduced at higher temperatures, as required.
Brake	A second brake is not required.
Further measure for the DC	
Heat protection shield	A heat protection shield must be used depending on the suspension height and the temperature.
Chain drive	Chain guide and chain sprocket must be checked from time to time in order to detect visible damage (e.g. chain being caught) caused by dirt or metal spatters being drawn in with the chain.
Chain	If chain lubrication is not possible, the HS7 chain is used. This chain does not need to be lubricated, application of a dry film lubricant is possible.
Control pendant	Use DST control pendant with support sleeve or 2TY cable instead of standard DSC control pendant and height-adjustable cable.
Surface protection	Powder-coated housing surfaces of the chain hoist do not require an additional protective coating.
Cut-off spring	The standard buffers must be replaced by cut-off springs.

1.9 Hoist chains

The genuine Demag chain is a round-section steel chain tested to EN 818-7 which is subject to the regulations for round-section steel chains used in hoist applications issued by the Main Association of Industrial Employers' Mutual Insurance Societies, Central Department for Accident Prevention and the test criteria for round-section steel chains used in hoist applications and the inspection regulations to DIN 685 part 5 of Nov. 1981 as well as BGV D8 and BGV D6.

Pay attention to reduced load capacities.
The special chains listed below can be used for special environments and non-standard operating conditions.

	Chain hoist Size	Max. load capacity for reeving 1/1 [kg]	Max. load capacity for reeving 2/1 [kg]	Dimensions [mm]	Stamp, chain quality	Weight per metre [kg]	Production test force [kN]	Minimum breaking force [kN]	Minimum elongation at rupture [%]
Demag RDC/TDK standard chain									
	DC 1 - 2	250	-	4,2 x 12,2	DAT RDC/TDK	0,38	13,8	22	10
	DC 5	500	-	5,3 x 15,2		0,62	22	35	
	DC 10	1250	2500	7,4 x 21,2		1,20	43	70	
	DC 15 - 16	1600	3200	8,7 x 24,2		1,67	59	95	
	DC 25	2500	5000	10,5 x 28,2		2,49	87	138	
Properties	High-strength ageing-resistant material with a high degree of surface hardening, galvanised with additional surface treatment, blue-chromated, colour: silver								
Material	Ni-Mo special chain steel acc. to EN 818-7, part 5.3.1								
Lubrication	GP00H-30REN.SO-GFB grease								
Demag Corrud special chain									
Application, e.g. galvanising, electroplating facilities	DC 1 - 2	250	-	4,2 x 12,2	DAT RDC/TDK	0,38	13,8	22	10
	DC 5	500	-	5,3 x 15,2		0,62	22	35	
	DC 10	1250	2500	7,4 x 21,2		1,20	43	70	
	DC 15 - 16	1600	3200	8,7 x 24,2		1,67	59	95	
	DC 25	2500	5000	10,5 x 28,2		2,49	87	138	
Properties	Ageing-resistant, corrosion-free, 'Corrud DS' micro-layer corrosion protection, black-coated, colour: black, Stabylan 2001								
Material	Ni-Mo special chain steel acc. to EN 818-7, part 5.3.1								
Lubrication	Acid-resistant chain grease e.g. GLEITMO 582								
Demag HS7 special chain									
Application, e.g. foundry, dust, emery, blasting	DC 1 - 2	160	-	4,2 x 12,2	RSX / DS	0,38	12,5	19,3	5
	DC 5	400	-	5,3 x 15,2		0,62	19,8	30,8	
	DC 10	800	1600	7,4 x 21,2		1,20	38,7	60	
	DC 15 - 16	-	-	-		-	-	-	
	DC 25	1600	3200	10,5 x 28,2		2,49	78	121	
Properties	Ageing-resistant, blue-chromated, with deeper surface hardening								
Material	Ni-Mo special chain steel acc. to EN 818-7, part 5.3.1								
Lubrication	Dry or with dry lubricant, e.g. Ceplatlyn 300								
Demag RS6 special chain									
Application, e.g. foodstuffs sector	DC 1 - 2	125 [1] - 160 [2]	-	4,2 x 12,2	RSA / S	0,38	10	16	15
	DC 5	200 [1] - 250 [2]	-	5,3 x 15,2		0,62	16	25	
	DC 10	400 [1] - 500 [2]	800 [3] - 1000 [4]	7,4 x 21,2		1,20	32	50	
	DC 15 - 16	-	-	-		-	-	-	
	DC 25	630 [1] - 800 [2]	1250 [3] - 1600 [4]	10,5 x 28,2		2,23	50	80	
Properties	Non-rusting chain, not hardened, bright								
Material	Stainless steel AISI 316 (V4A) 1,4401								
Lubrication	Edible lubricant, e.g. Paraliq chain spray								

1) for max. 25 – 50 cycles per day
2) for max. 10 cycles per day
3) for max. 12 – 25 cycles per day
4) for max. 5 cycles per day

20352544.indd/180713

1.10 Electric key values

1.10.1 DC-Pro, DC-ProDC, DC-ProCC (2 hoist speeds)

Hoist motor data

Chain hoist size	Type of control			Motor size	Number of poles	P_N	CDF	n_N	Starts/h	Min. / max. currents and start-up current				
	DC-Pro	DC-ProDC	DC-ProCC			[kW]	[%]	[rpm]		$I_{N\ min.}$ [A]	$I_{N\ max.}$ [A]	$I_{max.}$ 1) [A]	$I_A/I_{N\ max.}$	cos φ_N
220-240 V, 50 Hz, 3 ~ (CE) 2)														
1	X	X	X	ZNK 71 B 8/2	8	0,05	20	720	240	1,75	2,10	2,10	1,45	0,48
					2	0,18	40	2925	120	2,10	2,80	2,80	2,75	0,46
2	X	X	X	ZNK 71 B 8/2	8	0,10	20	675	240	1,80	2,10	2,35	1,45	0,56
					2	0,37	40	2825	120	2,40	2,80	3,20	2,75	0,63
5	X	X	X	ZNK 80 B 8/2	8	0,18	20	665	240	2,45	2,80	2,95	1,45	0,51
					2	0,72	40	2745	120	3,80	4,20	4,70	3,00	0,77
10	X	X	X	ZNK 100 A 8/2	8	0,27	20	690	240	2,95	3,30	3,80	1,80	0,54
					2	1,10	40	2745	120	5,40	5,40	6,10	3,60	0,81
10	-	X	-	ZNK 100 B 8/2	8	0,57	20	675	240	5,20	5,90	6,80	1,85	0,58
15	-	X	-											
16	X	-	-		2	2,30	40	2790	120	9,50	10,70	11,00	4,15	0,77
16	-	-	-	ZNK 100 C 8/2	8	0,93	20	685	240	-				
25					2	3,70	40	2820	120					
380-415 V, 50 Hz, 3 ~ (CE) 2)														
1	X	X	X	ZNK 71 A 8/2 3)	8	0,05	20	700	240	0,95	1,10	1,10	1,20	0,66
					2	0,18	40	2840	120	1,20	1,40	1,40	2,60	0,57
				ZNK 71 B 8/2	8	0,05	20	720	240	1,00	1,20	1,20	1,45	0,48
					2	0,18	40	2925	120	1,20	1,60	1,60	2,75	0,46
2	X	X	X	ZNK 71 B 8/2	8	0,10	20	675	240	1,00	1,20	1,35	1,45	0,56
					2	0,37	40	2825	120	1,40	1,60	1,85	2,75	0,63
5	X	X	X	ZNK 80 B 8/2	8	0,18	20	665	240	1,40	1,60	1,70	1,45	0,51
					2	0,72	40	2745	120	2,20	2,40	2,70	3,00	0,77
10	X	X	X	ZNK 100 A 8/2	8	0,27	20	690	240	1,70	1,90	2,20	1,80	0,54
					2	1,10	40	2745	120	3,10	3,10	3,50	3,60	0,81
10	-	X	X	ZNK 100 B 8/2	8	0,57	20	675	240	3,00	3,40	3,90	1,85	0,58
15	X	X	X											
16	-	-	-		2	2,30	40	2790	120	5,50	6,20	6,40	4,15	0,77
16	X	-	-	ZNK 100 C 8/2	8	0,93	20	685	240	4,30	4,70	5,10	2,35	0,55
25					2	3,70	40	2820	120	8,20	8,40	8,90	4,95	0,82
500-525 V, 50 Hz, 3 ~ (CE) 2) 4)														
1	X	X	X	ZNK 71 B 8/2	8	0,05	20	720	240	0,75	0,95	0,95	1,45	0,48
					2	0,18	40	2925	120	0,90	1,25	1,25	2,75	0,46
2	X	X	X	ZNK 71 B 8/2	8	0,10	20	675	240	0,80	0,95	1,10	1,45	0,56
					2	0,37	40	2825	120	1,10	1,25	1,45	2,75	0,63
5	X	X	X	ZNK 80 B 8/2	8	0,18	20	665	240	1,20	1,30	1,35	1,45	0,51
					2	0,72	40	2745	120	1,80	1,90	2,15	3,00	0,77
10	X	X	X	ZNK 100 A 8/2	8	0,27	20	690	240	1,35	1,50	1,75	1,80	0,54
					2	1,10	40	2745	120	2,40	2,50	2,80	3,60	0,81
10	-	X	X	ZNK 100 B 8/2	8	0,57	20	675	240	2,50	2,70	3,10	1,85	0,58
15	X	X	X											
16	-	-	-		2	2,30	40	2790	120	4,60	4,90	5,10	4,15	0,77
16	X	-	-	ZNK 100 C 8/2	8	0,93	20	685	240	3,50	3,70	4,00	2,35	0,55
25					2	3,70	40	2820	120	6,60	6,70	7,00	4,95	0,82

1) I_{max} = maximum current for lowering motion.
2) A short-term voltage tolerance of ± 10 % or a short-term frequency tolerance of ± 2 % is possible. Motors are designed in compliance with insulation class F.
3) For replacement requirements, the ZNK 71 A 8/2 motor at 380-415 V / 50 Hz is replaced by the ZNK 71 B 8/2 motor.
4) DC-ProDC with GF brake module only up to 500 V.

Chain hoist size	Type of control			Motor size	Number of poles	P_N	CDF	n_N	Starts/h	Min. / max. currents and start-up current				
	DC-Pro	DC-ProDC	DC-ProCC			[kW]	[%]	[rpm]		$I_{N\ min.}$ [A]	$I_{N\ max.}$ [A]	$I_{max.}$ [1] [A]	$I_A/I_{N\ max.}$	cos φ_N
220-240 V, 60 Hz, 3 ~ (CE / $_C$CSA$_{US}$) 2)														
1	X	X	X	ZNK 71 B 8/2	8	0,06	20	870	240	2,10	2,50	2,50	1,45	0,47
					2	0,22	40	3525	120	2,50	3,35	3,35	2,75	0,45
2	X	X	X	ZNK 71 B 8/2	8	0,11	20	825	240	2,10	2,50	2,80	1,45	0,55
					2	0,44	40	3425	120	2,90	3,30	3,85	2,75	0,62
5	X	X	X	ZNK 80 B 8/2	8	0,22	20	815	240	2,90	3,30	3,50	1,45	0,50
					2	0,86	40	3345	120	4,60	5,00	5,60	3,00	0,76
10	X	X	X	ZNK 100 A 8/2	8	0,32	20	840	240	3,55	3,90	4,60	1,80	0,53
					2	1,30	40	3345	120	6,50	6,40	7,30	3,60	0,80
10	-	X	-	ZNK 100 B 8/2	8	0,68	20	825	240	6,20	7,10	8,10	1,85	0,57
15	-	X	-											
16	X	-	-		2	2,80	40	3390	120	11,40	12,90	13,30	4,15	0,76
16	-	-	-	ZNK 100 C 8/2	8	1,15	20	835	240	-				
25					2	4,50	40	3420	120					
380-400 V, 60 Hz, 3 ~ (CE) 2)														
1	X	X	X	ZNK 71 B 8/2	8	0,06	20	870	240	1,35	1,60	1,60	1,45	0,47
					2	0,22	40	3525	120	1,70	2,00	2,00	2,75	0,45
2	X	X	X	ZNK 71 B 8/2	8	0,11	20	825	240	1,50	1,60	1,80	1,45	0,55
					2	0,44	40	3425	120	1,80	2,00	2,30	2,75	0,62
5	X	X	X	ZNK 80 B 8/2	8	0,22	20	815	240	1,80	1,95	2,00	1,45	0,50
					2	0,86	40	3345	120	1,75	2,90	3,20	3,00	0,76
10	X	X	X	ZNK 100 A 8/2	8	0,32	20	840	240	2,40	2,70	2,90	1,80	0,53
					2	1,30	40	3345	120	3,80	4,00	4,60	3,60	0,80
10	-	X	X	ZNK 100 B 8/2	8	0,68	20	825	240	3,90	4,30	4,90	1,85	0,57
15	X	X	X											
16	-	-	-		2	2,80	40	3390	120	7,20	7,70	8,00	4,15	0,76
16	X	-	-	ZNK 100 C 8/2	8	1,15	20	835	240	5,50	5,80	6,30	2,35	0,54
25					2	4,50	40	3420	120	10,50	10,60	11,00	4,95	0,81
440-480 V, 60 Hz, 3 ~ (CE / $_C$CSA$_{US}$) 2)														
1	X	X	X	ZNK 71 B 8/2	8	0,06	20	870	240	1,05	1,25	1,25	1,45	0,47
					2	0,22	40	3525	120	1,25	1,65	1,65	2,75	0,45
2	X	X	X	ZNK 71 B 8/2	8	0,11	20	825	240	1,05	1,25	1,40	1,45	0,55
					2	0,44	40	3425	120	1,45	1,65	1,95	2,75	0,62
5	X	X	X	ZNK 80 B 8/2	8	0,22	20	815	240	1,50	1,70	1,80	1,45	0,50
					2	0,86	40	3345	120	2,30	2,50	2,80	3,00	0,76
10	X	X	X	ZNK 100 A 8/2	8	0,32	20	840	240	1,80	1,95	2,30	1,80	0,53
					2	1,30	40	3345	120	3,25	3,20	3,70	3,60	0,80
10	-	X	X	ZNK 100 B 8/2	8	0,68	20	825	240	3,10	3,50	4,00	1,85	0,57
15	X	X	X											
16	-	-	-		2	2,80	40	3390	120	5,70	6,40	6,60	4,15	0,76
16	X	-	-	ZNK 100 C 8/2	8	1,15	20	835	240	4,50	4,90	5,30	2,35	0,54
25					2	4,50	40	3420	120	8,50	8,70	9,20	4,95	0,81
575 V, 60 Hz, 3 ~ (CE / $_C$CSA$_{US}$) 2)														
1	X	-	X	ZNK 71 B 8/2	8	0,06	20	870	240	0,85		0,85	1,45	0,48
					2	0,22	40	3525	120	0,90		0,90	2,75	0,46
2	X	-	X	ZNK 71 B 8/2	8	0,11	20	825	240	0,90		1,00	1,45	0,65
					2	0,44	40	3425	120	1,00		1,15	2,75	0,63
5	X	-	X	ZNK 80 B 8/2	8	0,22	20	815	240	1,10		1,35	1,45	0,54
					2	0,86	40	3345	120	1,75		2,10	3,00	0,88
10	X	-	X	ZNK 100 A 8/2	8	0,32	20	840	240	1,35		1,55	2,10	0,58
					2	1,30	40	3345	120	2,40		2,70	3,80	0,87
10	-	-	X	ZNK 100 B 8/2	8	0,68	20	825	240	2,40		2,70	1,85	0,62
15	X	-	X											
16	-	-	-		2	2,80	40	3390	120	4,40		4,50	4,15	0,83
16	X	-	-	ZNK 100 C 8/2	8	1,15	20	835	240	3,40		3,70	2,35	0,62
25					2	4,50	40	3420	120	6,50		6,90	4,95	0,89

1) I_{max} = maximum current for lowering motion.
2) A short-term voltage tolerance of ± 10 % or a short-term frequency tolerance of ± 2 % is possible. Motors are designed in compliance with insulation class F.

20352544.indd/180713

Mains connection delay fuse links

Voltage		220-240V	380-415V	500-525V	220-240V	380-400V	440-480V	575V
Frequency		50Hz			60Hz			
Size	Motor size	[A]	[A]	[A]	[A]	[A]	[A]	[A]
DC-Pro 1	ZNK 71 A 8/2	6	6	6	6	6	6	6
	ZNK 71 B 8/2							
DC-Pro 2	ZNK 71 B 8/2							
DC-Pro 5	ZNK 80 B 8/2	10			10			
DC-Pro 10	ZNK 100 A 8/2							
	ZNK 100 B 8/2	-	10	10	-	16	10	
DC-Pro 15	ZNK 100 B 8/2		16			15	15	10
DC-Pro 16	ZNK 100 B 8/2	20			25			
	ZNK 100 C 8/2	-	20	16	-	20	20	15
DC-Pro 25	ZNK 100 C 8/2							

Danger
Live components
Danger to life and limb.

Electric energy may cause very severe injuries. If the insulation or individual components are damaged, there is a danger to life caused by electric current.

For safety reasons, we recommend the use of 3-pole automatic circuit breakers/circuit breakers (to DIN EN 60898-1, tripping characteristic B or C) instead of separate fuse links. This arrangement ensures that all phases are disconnected from the power supply in the event of a short circuit.

Supply lines [1] for 5% voltage drop ΔU and start-up current I_A

Voltage		220-240V		380-415V		500-525V		220-240V		380-400V		440-480V		575V	
Frequency		50Hz						60Hz							
Size	Motor size	[mm²]	[m]	[mm²]	[m]	[mm²]	[m]	[mm²]	[m]	[mm²]	[m]	[mm²]	[m]	[mm²]	[m]
DC-Pro 1	ZNK 71 A 8/2	1,5	89	1,5	100	1,5	100	1,5	76	1,5	100	1,5	100	1,5	100
	ZNK 71 B 8/2														
DC-Pro 2	ZNK 71 B 8/2														
DC-Pro 5	ZNK 80 B 8/2		31		94				26		75				
DC-Pro 10	ZNK 100 A 8/2		34						29		78				
	ZNK 100 B 8/2	-	-		38		61	-	-	2,5	45		43		78
DC-Pro 15	ZNK 100 B 8/2				46		73			1,5	36		52		90
DC-Pro 16	ZNK 100 B 8/2	2,5	25					2,5	21						
	ZNK 100 C 8/2	-		2,5	47		45	-		2,5		2,5	53		51
DC-Pro 25	ZNK 100 C 8/2														

1) The lengths of the supply lines are calculated on the basis of an earth-loop impedance of 200 mΩ.

1.10.2 DCS-Pro, DCMS-Pro, DCRS-Pro, DC-ProFC (variable hoist speed)

Hoist motor data

Chain hoist size	Motor size	Number of poles	P_N [kW]	CDF [1] [%]	n_N [rpm]	Min. / max. currents and start-up current $I_{N\ 380\text{-}480}$ [A]	$M_K/M_{N\ 380\text{-}480}$	$\cos \varphi_N$
380-480 V, 50/60 Hz, 3 ~ (CE / $_C$CSA$_{US}$) [2]								
DCS-Pro 1	ZNK 71 B 4	4	0,73	60	2480	3,10	2,50	0,50
DCS-Pro 2	ZNK 71 B 4	4	0,73	60	2480	3,10	2,50	0,50
DCS-Pro 5	ZNK 80 A 4	4	0,73	60	2540	2,90	3,20	0,58
DCS-Pro 10	ZNK 100 A 4	4	2,20	60	2520	4,50 [3]	2,70	0,68
DCS-Pro 15	ZNK 100 A 4	4	2,20	60	2520	4,50 [3]	2,70	0,68

Mains connection delay fuse links

Motor size	380-480 V, 50/60 Hz, 3 ~ [A]
ZNK 71 B 4	6
ZNK 80 A 4	
ZNK 100 A 4	10

Danger from live components.
Danger to life and limb.

Electric energy may cause very severe injuries. If the insulation or individual components are damaged, there is a danger to life caused by electric current.

- Frequency-inverter controlled chain hoists must only be operated if a protective earth conductor is connected. In the event of damage to or interruption of the protective earth conductor connection, the chain hoist must be disconnected from the power supply without delay.
- Fault-free operation with a current-operated e.l.c.b. (earth-leakage circuit-breaker) is ensured with a tripping current ≥ 30 mA, if residual-current-operated circuit breakers (type B to EN 50178, e.g. Siemens 5SZ3...G00) are used.

Supply lines [4] for 5 % voltage drop ΔU

Motor size	380-480 V, 50/60 Hz, 3 ~ [mm²]	[m]
ZNK 71 B 4	1,5	100
ZNK 80 A 4		
ZNK 100 A 4		40

1) 20% CDF at vs_{min}
60% CDF at vs_{rated} to vs_{max}
2) A short-term voltage tolerance of ± 10 % is possible. Motors are designed in compliance with insulation class F.
3)

vs_{rated}	SWL	$I_{n\ 380\text{-}400}$
6 m/min	1000 kg	4,50 A
6 m/min	2000 kg	5,50 A
12 m/min	1000 kg	5,50 A

4) The lengths of the supply lines are calculated on the basis of an earth-loop impedance of 200 mΩ.

20352544.indd/180713

1.11 Size overview

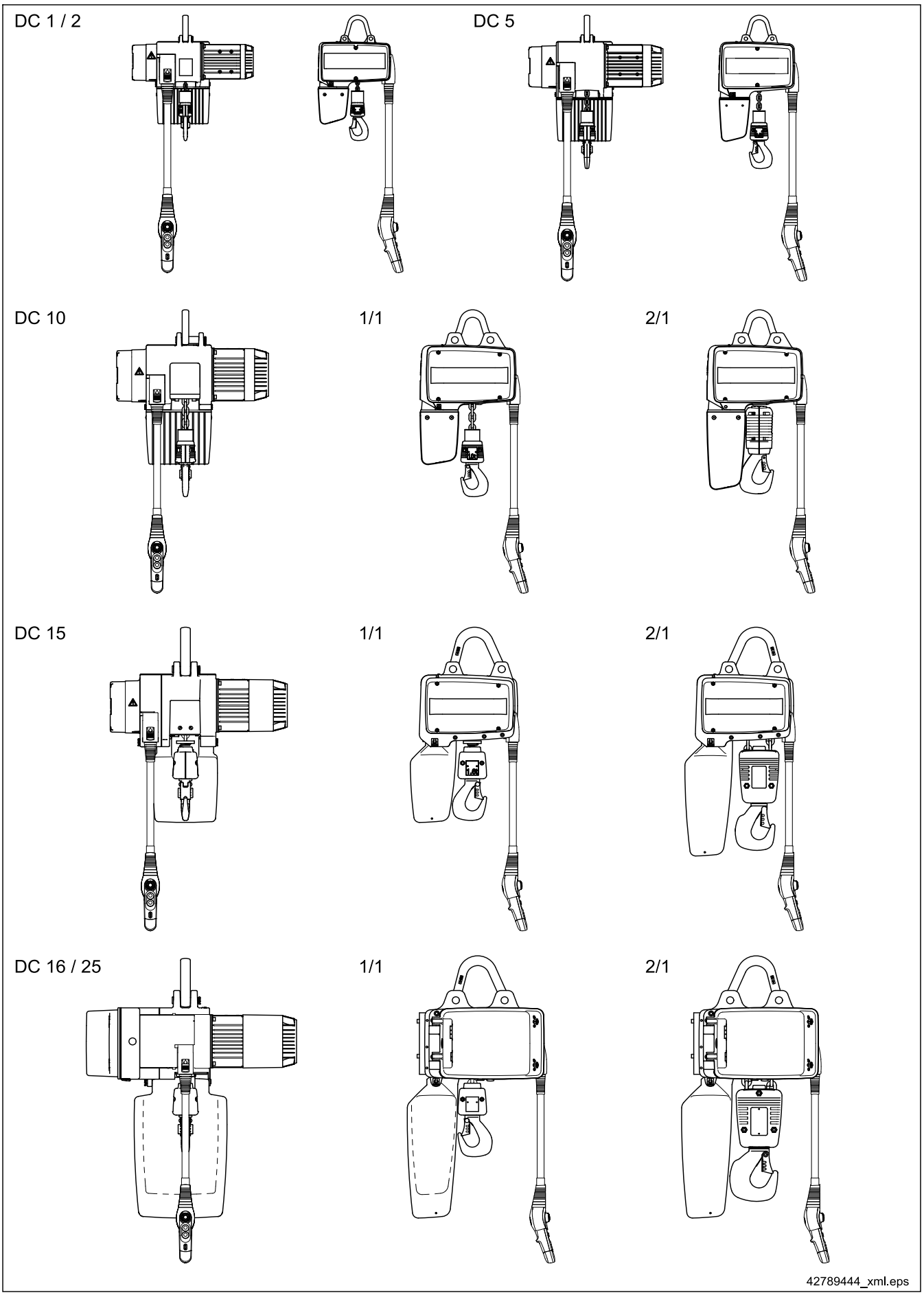

1.12 Dimensions

1.12.1 Demag DC-Pro 1 – 10 chain hoist

Load capacity ≤ 1250 kg, 1/1 reeving, with short suspension bracket

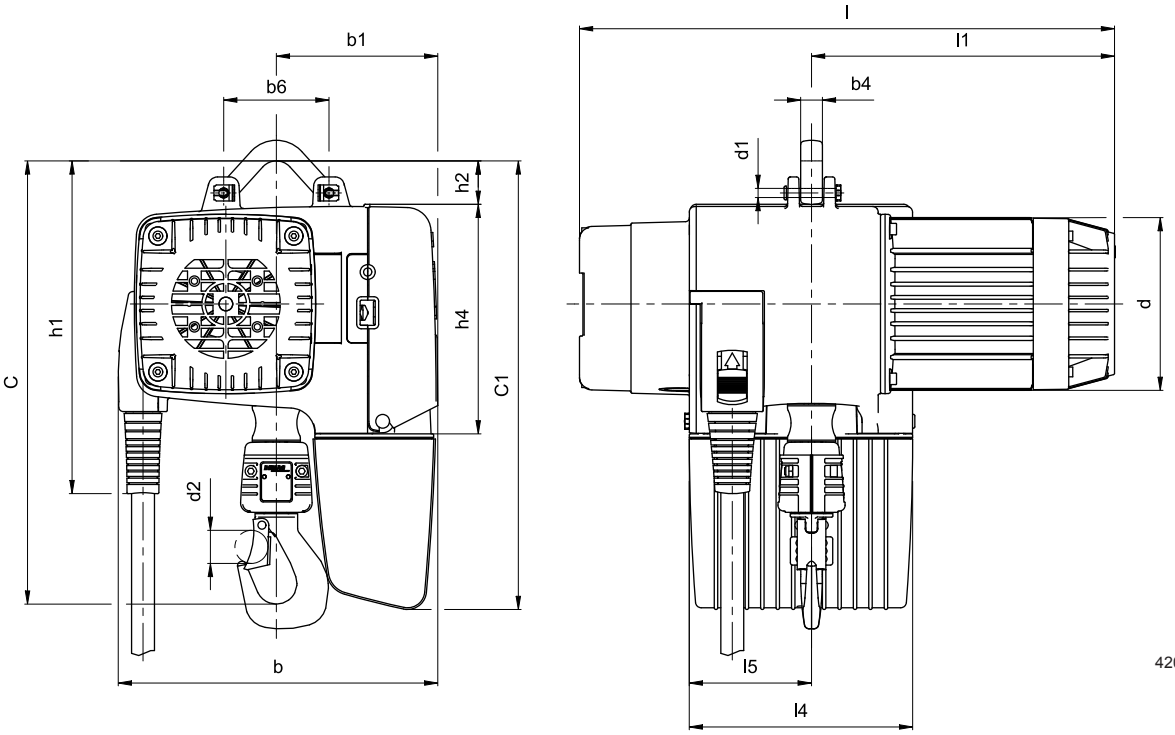

Load capacity ≤ 1250 kg, 1/1 reeving, with long suspension bracket

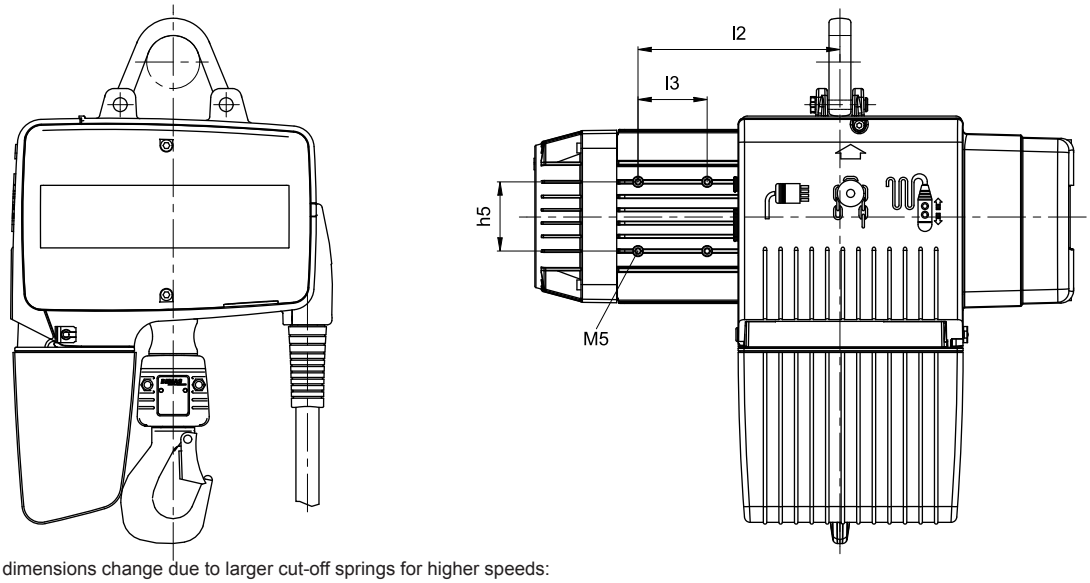

The following dimensions change due to larger cut-off springs for higher speeds:

1) H8 chain collector boxes are used for H5 hook paths and speed v2.
2) Dimension C is increased by 42 mm for chain hoists with v=16/4 or v=12/3.
   Dimension C is increased by 111 mm for DC 5 chain hoists with v=24/6.
   Dimension C is increased by 131 mm for DC 10 chain hoists with v=24/6.

Chain hoist size	Motor	Suspension bracket																				Suspension bracket					
		short	long	short		long																short		long			
				Chain collector box size																							
				H5	H8	H5	H8																				
		C 2)		C 1 1)				b	b1	l	l1	l2	l3	l4	l5	b4	b6	d	d1	d2	h1	h2	h1	h2	h4	h5
DC-Pro 1/2	ZNK 71 B 8/2	326	364	335	365	373	403	268	138	422	237	170	60	183	100	19	92	124	8	22	263	40	300	78	163	50
DC-Pro 5	ZNK 80 B 8/2	378	416	395	425	435	465	280	141	468	265	175		195	107			151		24	293		323		201	60
DC-Pro 10	ZNK 100 A 8/2	472	505	493	582	526	615	349	184	528	289	183		227	135	23	124	187	18	33	350	65	383	98	233	
	ZNK 100 B 8/2			582		615				578	339																

20352544.indd/180713

Load capacity > 1000 kg, 2/1 reeving, with short suspension bracket

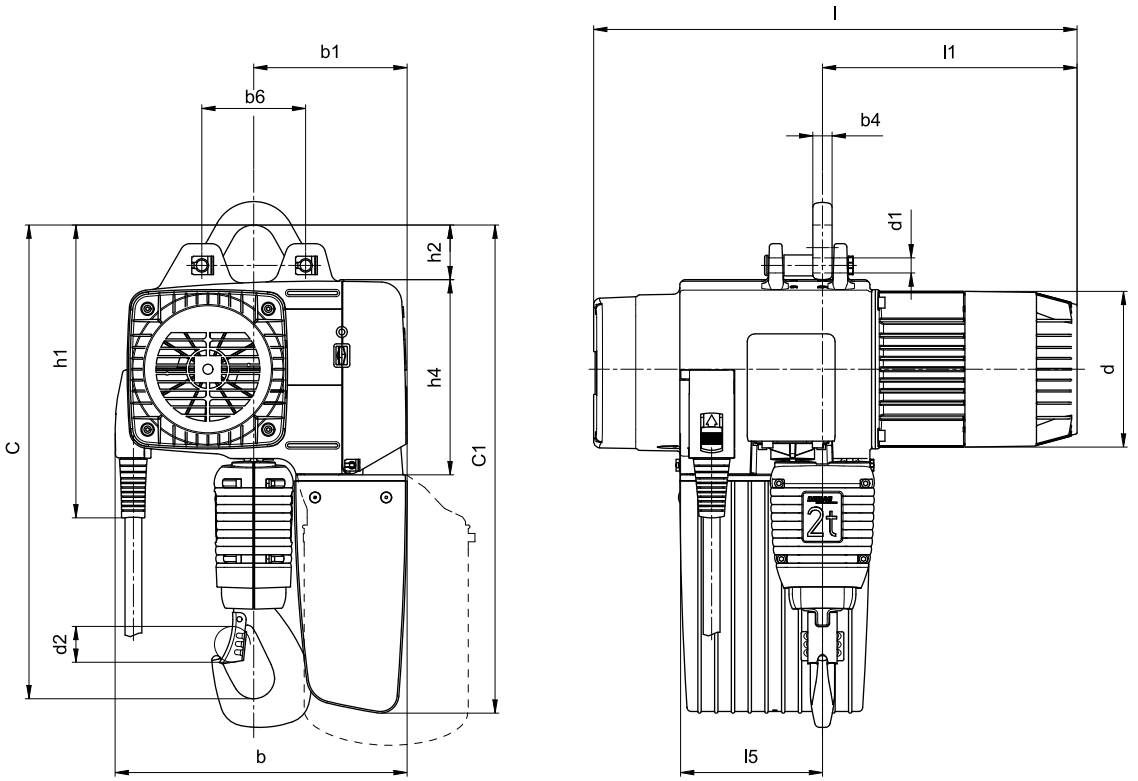

Load capacity > 1000 kg, 2/1 reeving, with long suspension bracket

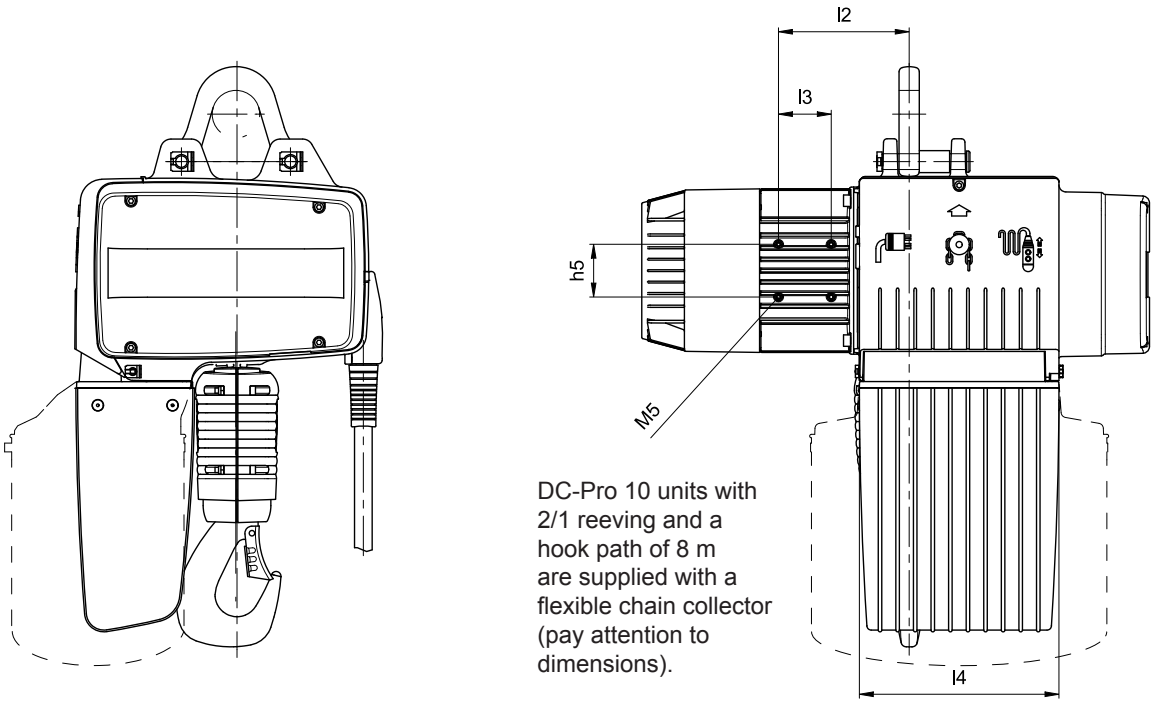

DC-Pro 10 units with 2/1 reeving and a hook path of 8 m are supplied with a flexible chain collector (pay attention to dimensions).

Size	Motor	Suspension bracket																						Suspension bracket					
		short	long	short		long																		short		long			
DC-Pro 10	ZNK 100 B 8/2	Chain collector box size																											
				H5	H8	H5	H8	H5	H8	H5	H8	H5	H8	H5	H8														
		C		C 1				b		b1		l4		l5		l	l1	l2	l3	b4	b6	d	d1	d2	h1	h2	h1	h2	h4	h5
		564	597	582	632	615	665	349	409	184	244	227	340	170	225	578	304	149	60	23	124	187	18	42	350	65	383	98	233	60

Load capacity ≤ 1600 kg, 1/1 reeving

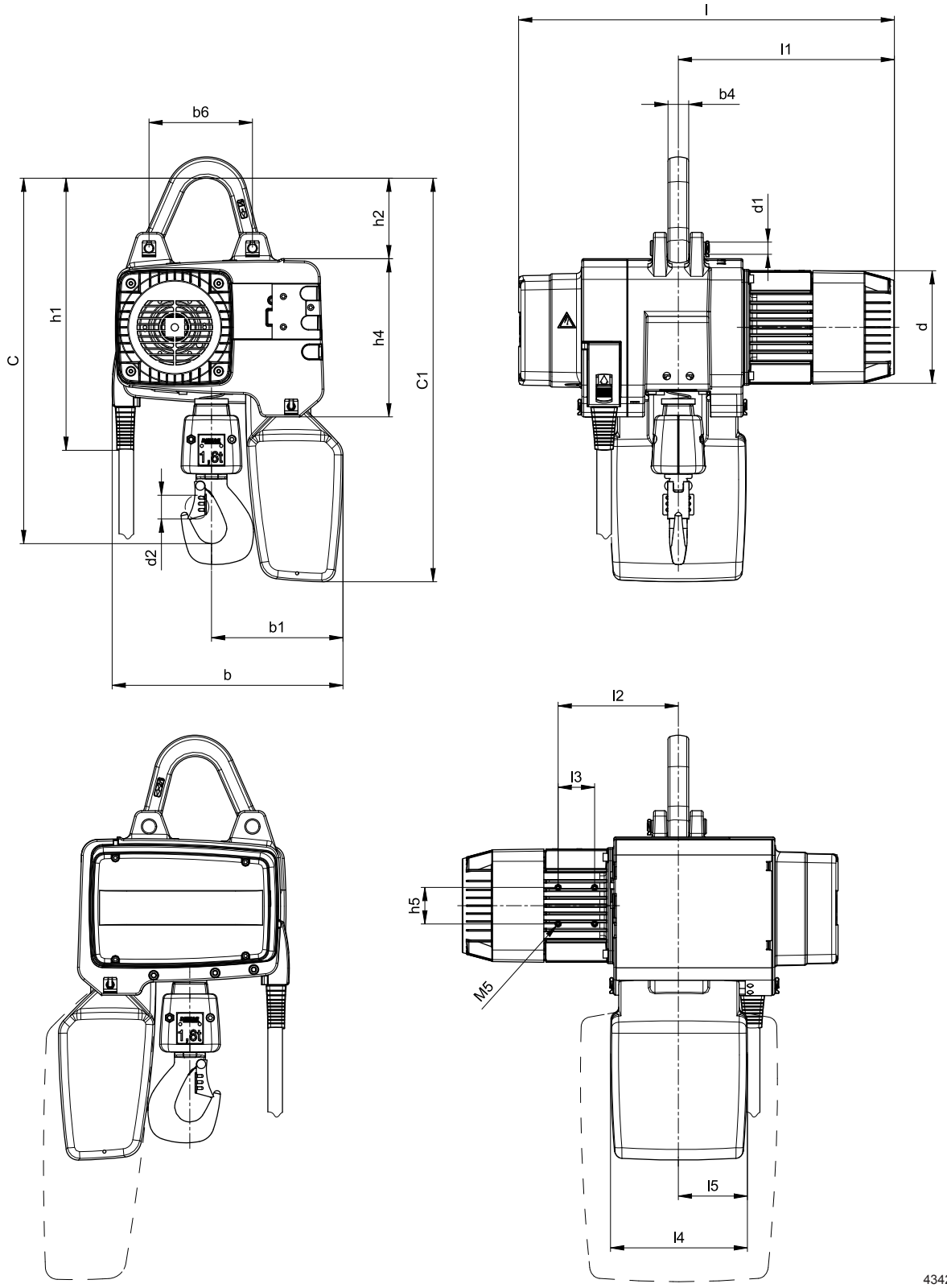

Size	Reeving	C1			b			b1			l4			l5		
		Chain collector box size														
		S	1	2	S	1	2	S	1	2	S	1	2	S	1	2
DC-Pro 15	1/1	H9 ➡ 663	H16 ➡ 783	H26 ➡ 863	379	384	389	216	221	226	224	260	320	112	130	160

Size	Reeving	C	l	l1	l2	l3	b4	b6	d	d1	d2	h1	h2	h4	h5
DC-Pro 15	1/1	598	618	355	198	60	34	170	187	20	39	447	132	260	60

Load capacity 2000 - 3200 kg, 2/1 reeving

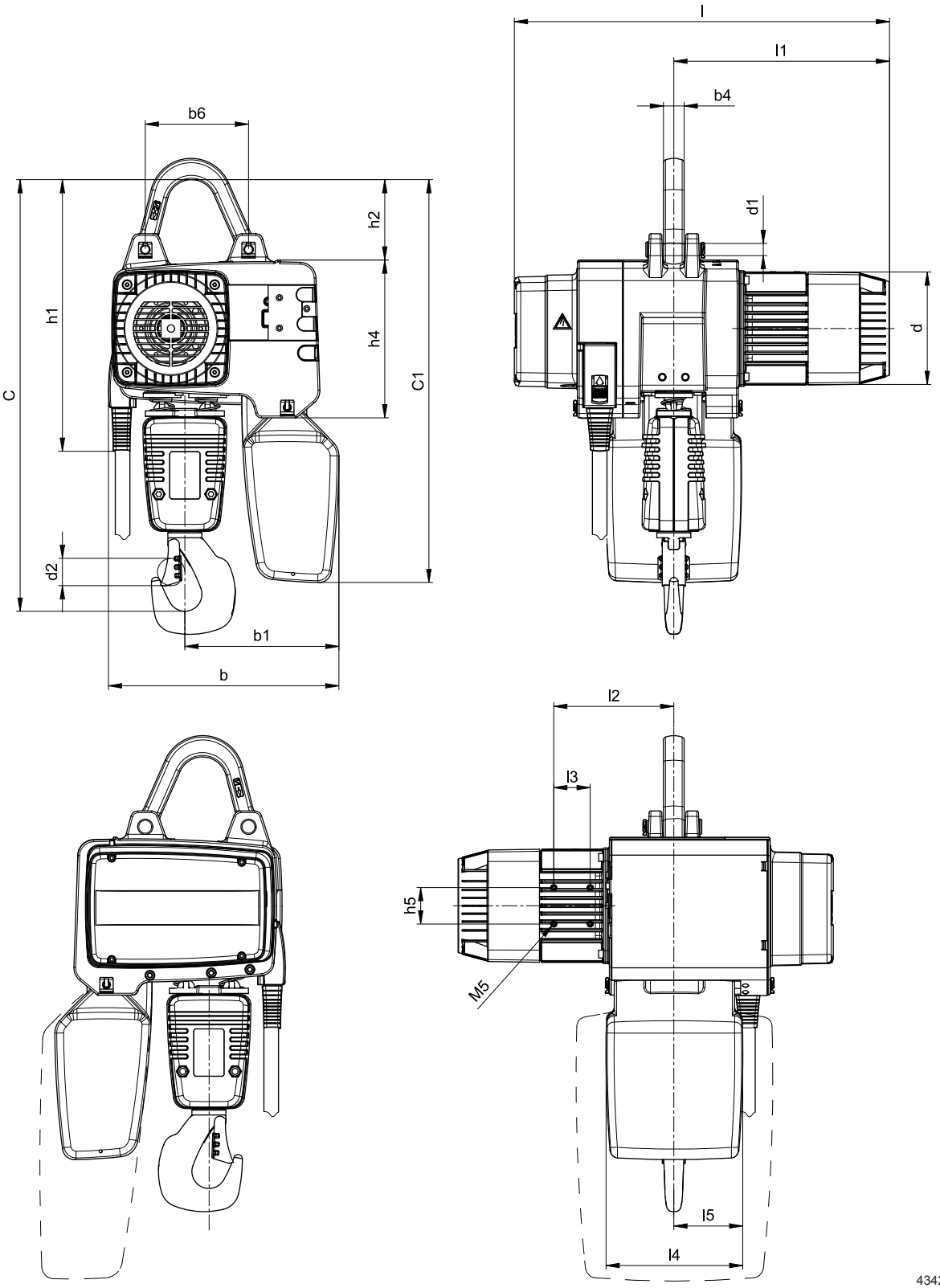

Size	Reeving	C1			b			b1			l4			l5		
		Chain collector box size														
		S	1	2	S	1	2	S	1	2	S	1	2	S	1	2
DC-Pro 15	2/1	H4 ➡ 663	H8 ➡ 783	H13 ➡ 863	379	384	389	254	259	264	224	260	320	112	130	160

Size	Reeving	C	l	l1	l2	l3	b4	b6	d	d1	d2	h1	h2	h4	h5
DC-Pro 15	2/1	708	618	355	198	60	34	170	187	20	45	447	132	260	60

1.12.3 Demag DC-Pro 16 - 25 chain hoist

1/1 reeving

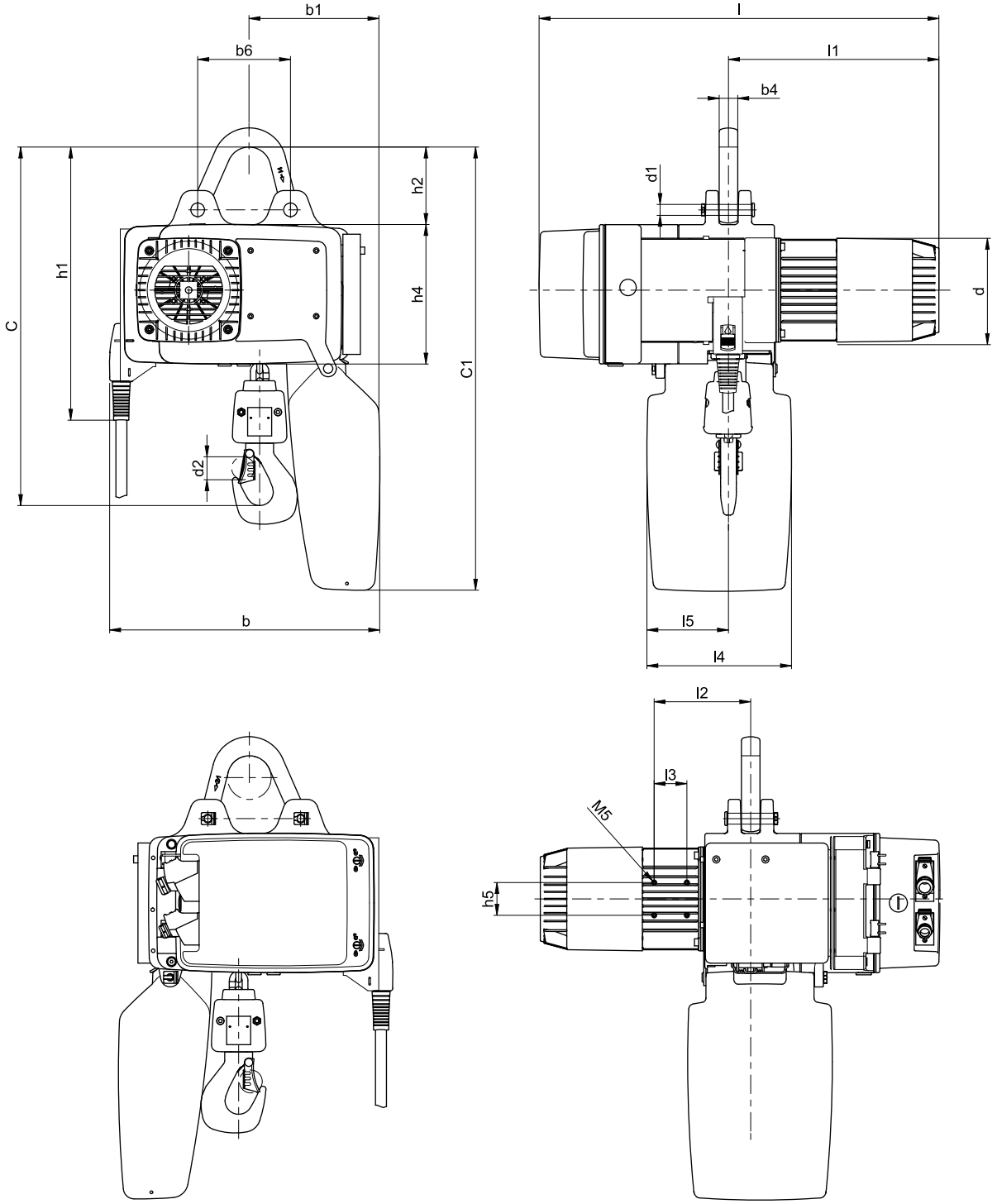

42700349.eps

Chain hoist size	Motor	C	Chain collector box size												l	l1	l2	l3	b4	b6	d	d1	d2	h1	h2	h4	h5
			1	2	1	2	1	2	1	2	1	2	1	2													
			C 1		Hook path		b		b1		l4		l5														
DC-Pro 16	ZNK 100 B 8/2	640	813	893	H16	H26	490	501	235	245	265	325	145	177	679	333	177	60	34	170	187	20	39	502	142	255	60
	ZNK 100 C 8/2														732	386											
DC-Pro 25					H10	H18																					

2/1 reeving

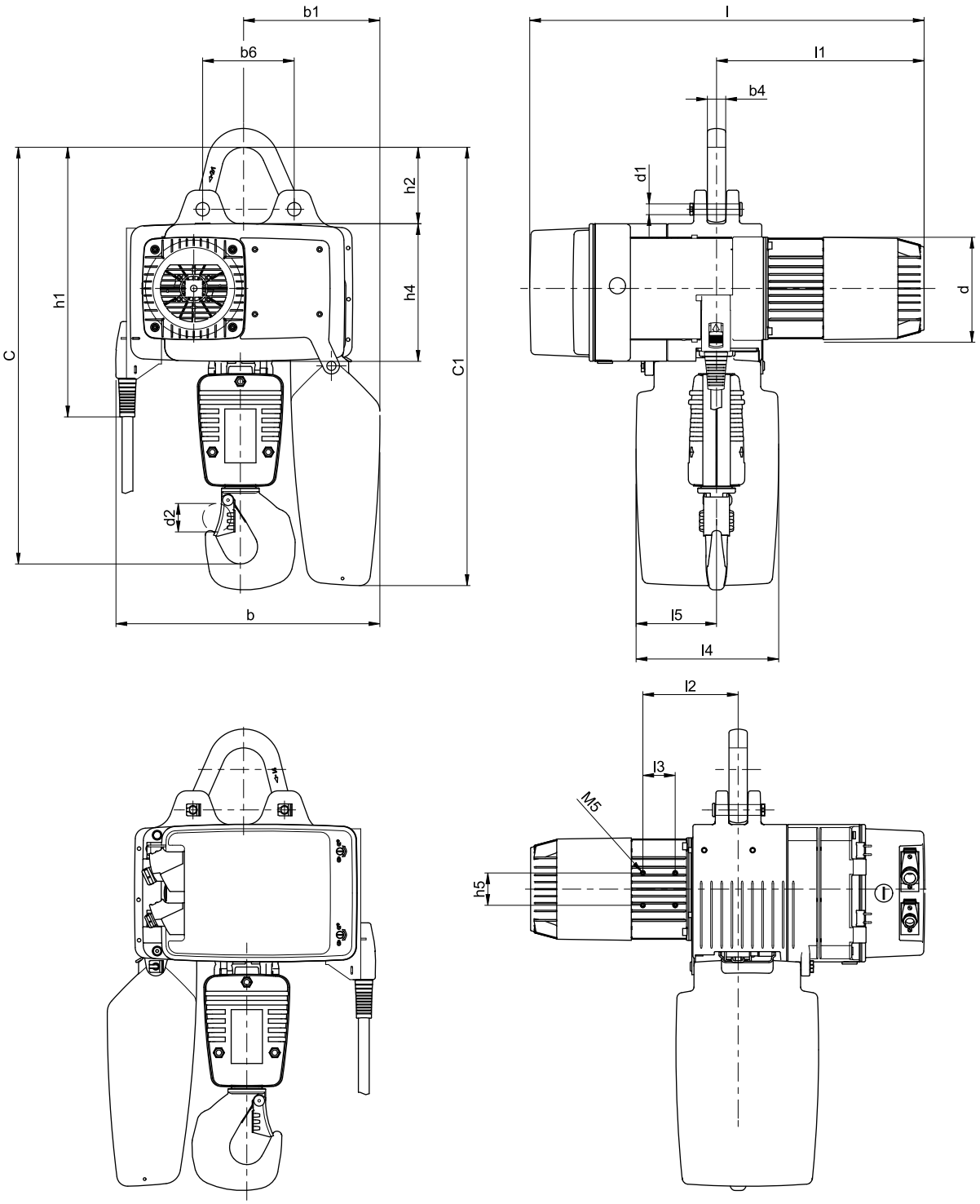

42700448.eps

Chain hoist size	Motor	C	Chain collector box size												l	l1	l2	l3	b4	b6	d	d1	d2	h1	h2	h4	h5
			1	2	1	2	1	2	1	2	1	2	1	2													
			C 1		Hook path		b		b1		l4		l5														
DC-Pro 16	ZNK 100 B 8/2	735	813	893	H8	H13	490	501	244	254	265	325	145	177	679	333	177	60	34	170	187	20	45	502	142	255	60
	ZNK 100 C 8/2														732	386											
DC-Pro 25		770			H5	H9																	50				

1.12.4 Demag DCS-Pro 1 – 10 chain hoist (chain hoist size DCS-Pro 15 in preparation)

Load capacity ≤ 500 kg, 1/1 reeving, with long suspension bracket

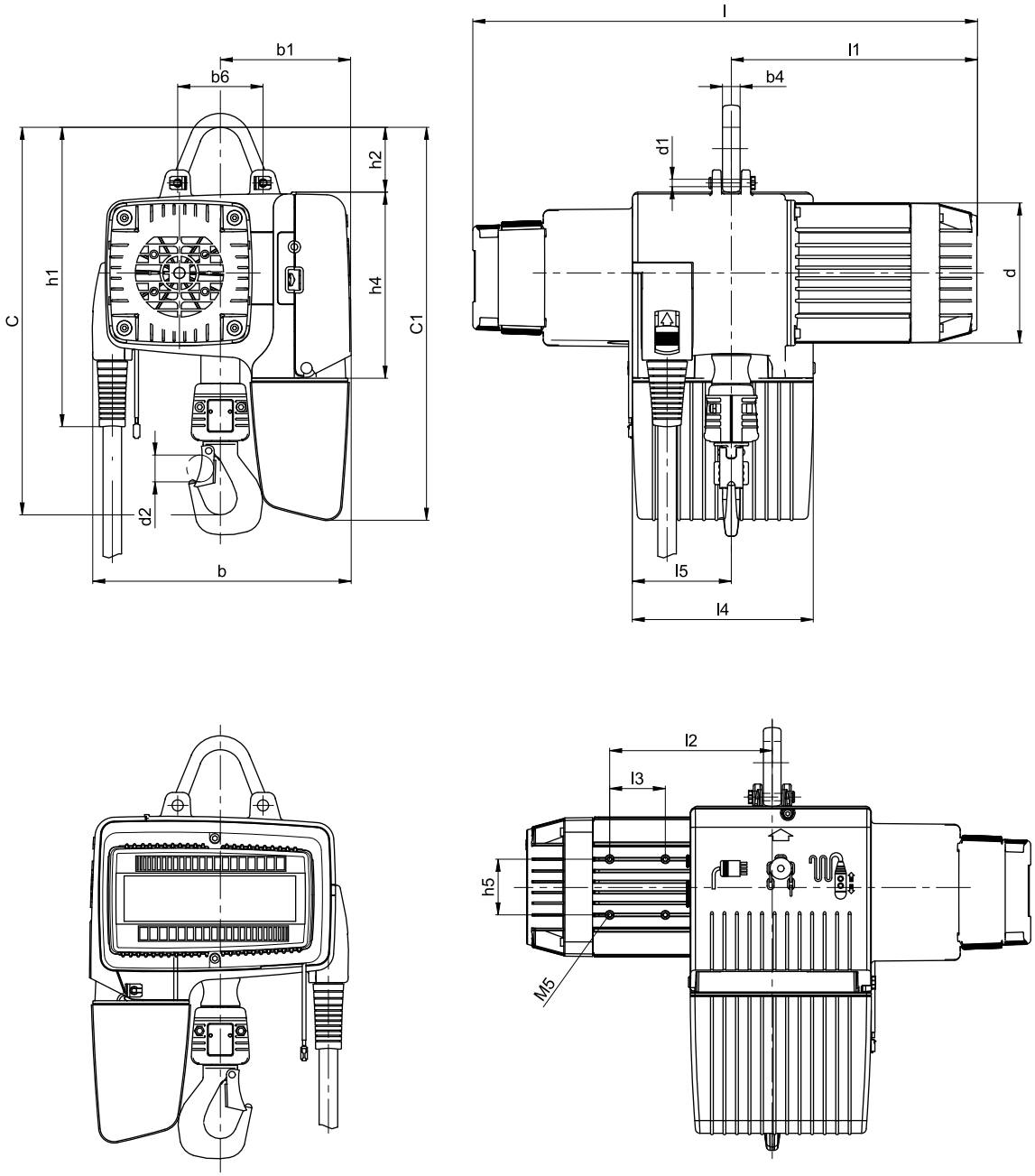

42736344.eps

Chain hoist size	Motor	Suspension bracket																			Suspension bracket					
		short	long	short		long															short		long			
				Chain collector box size																						
				H5	H8	H5	H8																			
		C		C1				b	b1	l	l1	l2	l3	l4	l5	b4	b6	d	d1	d2	h1	h2	h1	h2	h4	h5
DCS-Pro 1/2	**ZNK 71 B 4**	326	364	335	365	373	403	268	138	502	237	170	60	183	100	19	92	124	8	22	263	40	300	78	163	50
DCS-Pro 5	**ZNK 80 A 4**	378	416	395	425	435	465	280	141	548	265	175		195	107			151		24	293		323		201	60

Load capacity 630 - 2500 kg, 1/1 and 2/1 reeving, with long suspension bracket

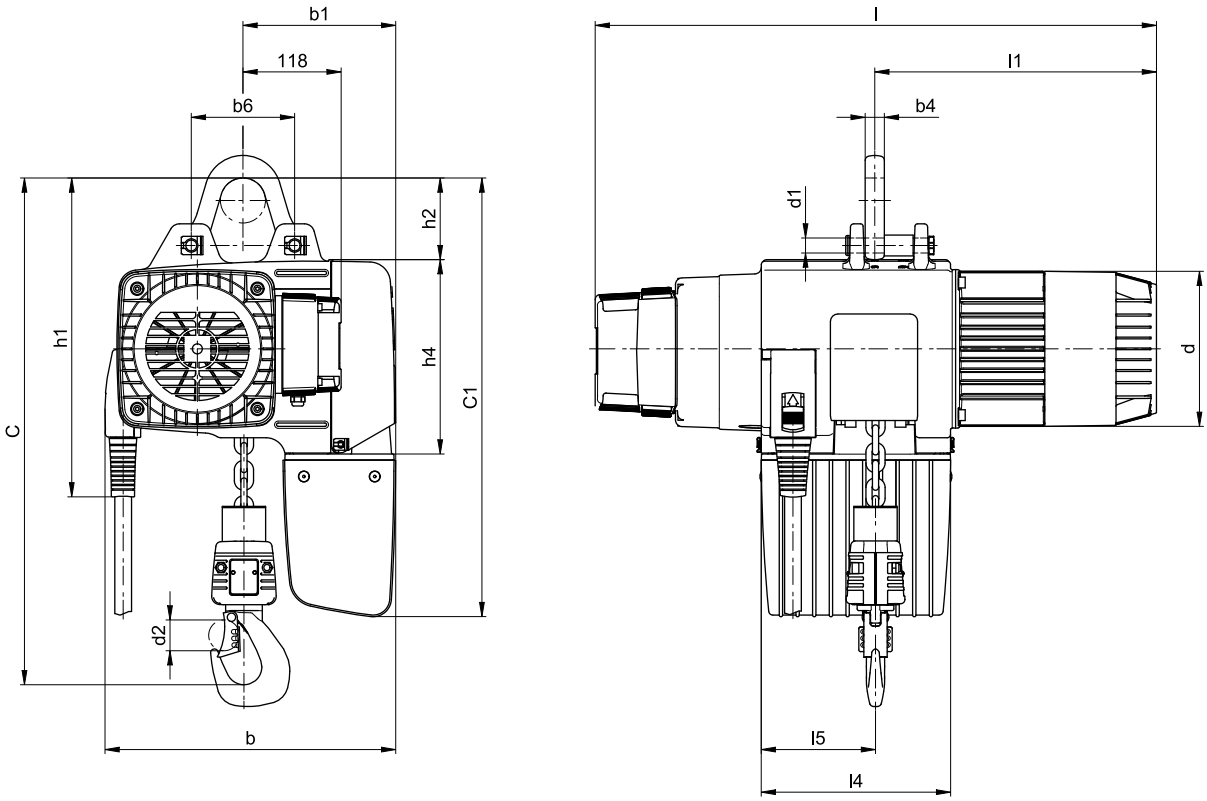

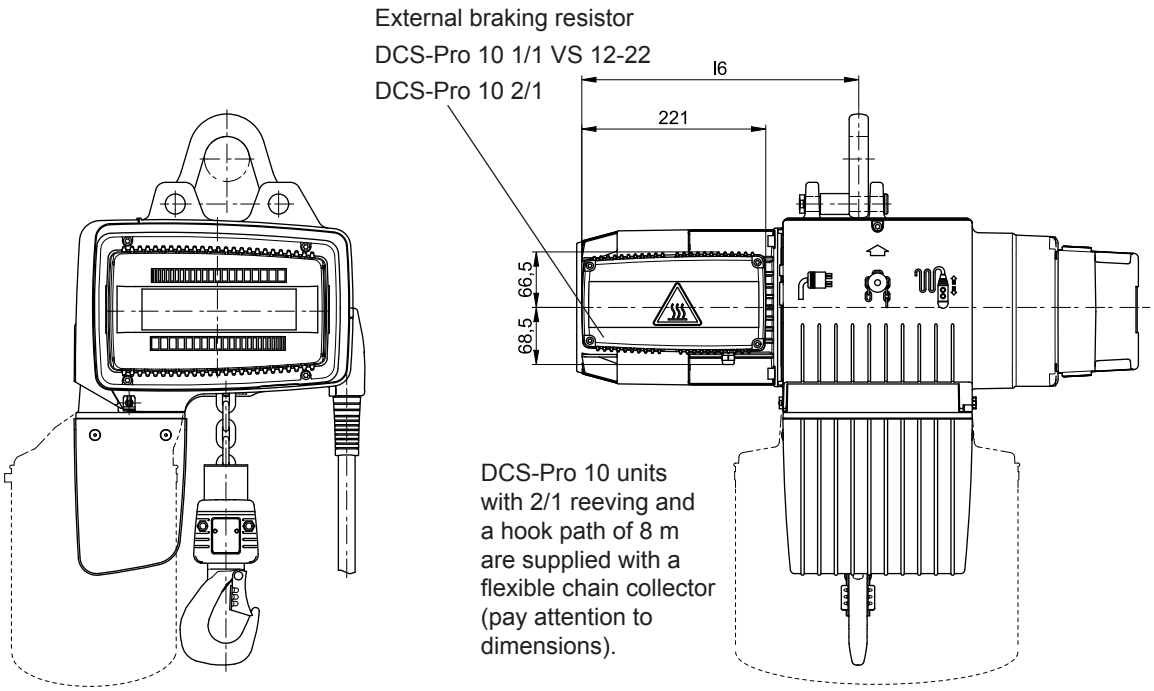

42736445.eps

Chain hoist size	Motor	Suspension bracket																												Suspension bracket				
		short	long	short		long																								short		long		
				Chain collector box size																														
				H5	H8	H5	H8	H5	H8	H5	H8	H5	H8	H5	H8																			
		C		C1				b		b1		l4		l5		l	l1	l6	b4	b6	d	d1	d2	h1	h2	h1	h2	h4
DCS-Pro 10 1/1	ZNK 100 A 4	472	505	493	582	526	615	349	409	184	244	227	340	135		674	339	333	23	124	187	18	33	350	65	383	98	233
DCS-Pro 10 2/1		564	597	582	632	615	665							170	225		304	298					42					

1.12.5 Demag DC-ProDC 1 - 25 chain hoist

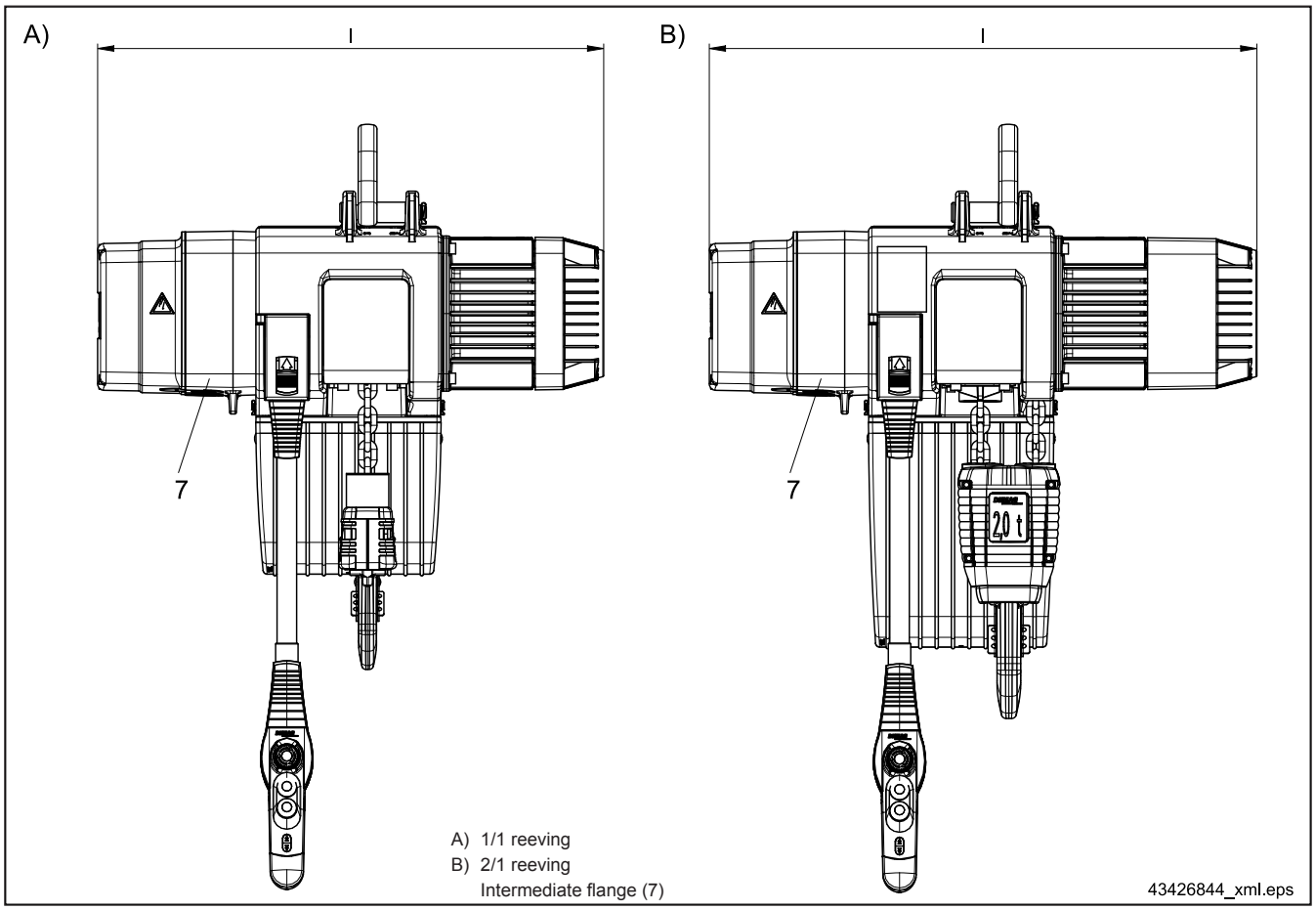

Chain hoist size	DC-Pro 1	DC-Pro 2	DC-Pro 5	DC-Pro 10			DC-Pro 15	
Load capacity [kg]	≤ 125	≤ 250	≤ 500	≤ 1000	≤ 1250	≤ 2500	≤ 1600	≤ 3200
Reeving	1/1					2/1	1/1	2/1
Motor size	ZNK 71 A 8/2	ZNK 71 B 8/2	ZNK 80 B 8/2	ZNK 100 A 8/2	ZNK 100 B 8/2			
l [mm]	532	532	578	618	668	668	708	708

The dimensions of DC-ProDC 16 - 25 units are identical with those of DC-Pro 16 - 25 units.

1.13 Long hook path > 8 m

When ordering DC chain hoists with hook paths longer than 8 m, please indicate the required control cable length.

The reduced load capacity of the chain hoist due to the deadweight of the chain must be considered for extremely long hook paths. The total weight of the chain must not exceed 10% of the load capacity of the chain hoist. Hook paths larger than those specified here on request.

The long suspension bracket must be used for DC chain hoists with flexible chain collector bags when

- a counterweight is fitted,
- a suspension and supporting roller are fitted.

Chain collectors for shorter hook paths than those shown in the following are supplied with the standard rigid plastic chain collector box.

Chain collectors for longer hook paths and sheet metal chain collector boxes on request.

For further information, please refer to the 'Accessories for long hook path assembly instructions', table page 17.

1.13.1 Counterweights and suspension via supporting roller

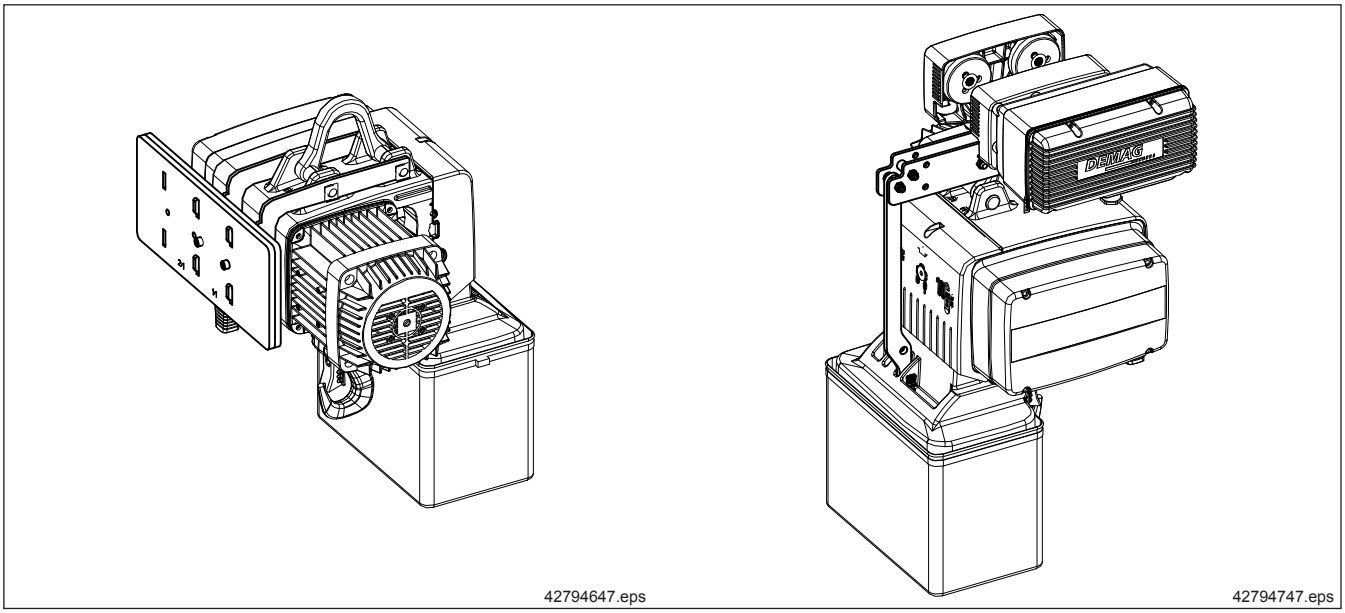

Chain hoist size	Reeving	Hook path [m]	Flexible chain collector bag 4) 5)	Stationary chain hoist and KBK: Longitudinal girder incl. counterweight 4) 5) 6) 7) 8) 10) 13) 16)	Stationary chain hoist and KBK: Additional counterweights	Travelling chain hoist: Suspension via supporting roller 4) 5) 9) 10) 14) 17) 18)
DC 1/2	1/1	9-25	717 350 45	---	---	---
		26-35	717 302 45	718 990 45	---	718 960 45 (U11)
		36-50	717 303 45		---	
		51-65	717 304 45		---	
DC 5		9-20	718 350 45	---	---	---
		21-35	718 302 45	718 990 45	---	718 960 45 (U11)
		36-50	718 303 45		1x 718 993 45	
		51-65	718 304 45		2x 718 993 45	
DC 10		9-10	--- 1)	---	---	---
		11-20	715 350 45 2)	---	---	---
		21-30	715 302 45	715 990 45	---	718 960 45 (U11) 11)
		31-40	715 303 45		1x 715 993 45	718 960 45 (U11) 11) 12)
		41-50	715 304 45		2x 715 993 45	
		51-60	715 305 45		3x 715 993 45	
	2/1	6-10	715 350 45 2)	---	---	---
		11-15	715 302 45	715 990 45	---	715 960 45 (U22/34)
		16-20	715 303 45		1x 715 993 45	
		21-25	715 304 45		2x 715 993 45	
		26-30	715 305 45		3x 715 993 45	
DC 15	1/1	4-9	721 189 45 1)	---	---	---
		10-16	721 190 45 1)	---	---	---
		17-26	721 191 45 1)	721 990 45	---	721 960 45 (U34/56) 15)
		27-40	721 350 45		---	
	2/1	4	721 189 45 1)	---	---	---
		5-8	721 190 45 1)	---	---	---
		9-13	721 191 45 1)	721 990 45	---	721 960 45 (U34/56) 15)
		14-20	721 350 45		---	
DC 16	1/1	4-16	721 830 45 1)	---	---	---
		17-26	721 835 45 1)	---	---	---
		27-40	721 350 45	721 990 45	---	721 960 45 (U34/56) 15)
	2/1	4-8	721 830 45 1)	---	---	---
		9-13	721 835 45 1)	---	---	---
		14-20	721 350 45	721 990 45	---	721 960 45 (U34/56) 15)
DC 25	1/1	4-10	721 830 45 1)	---	---	---
		11-18	721 835 45 1)	---	---	---
		19-30	721 350 45	721 990 45	---	721 960 45 (U34/56) 15)
		31-40	749 312 46 3)	721 990 45 3)	2x 721 993 45	721 960 45 (U34/56) 3) 15)
	2/1	4-5	721 830 45 1)	---	---	---
		6-9	721 835 45 1)	---	---	---
		10-15	721 350 45	721 990 45	---	721 960 45 (U34/56) 15)
		16-20	749 312 46 3)	721 990 45 3)	2x 721 993 45	721 960 45 (U34/56) 3) 15)

1) Standard plastic chain collector box.
2) Flexible chain collector bag
3) Design with sheet metal chain collector
4) Larger hook paths on request.
5) Pay attention to reduced load capacity owing to chain deadweight, as required.
6) For application in a KBK installation, pay attention to the crab frame installation dimensions.
7) Not possible with short suspension bracket.
8) Application with RUD/EUD possible.
9) Not possible with short suspension bracket / suspension ring / suspension hook and RUD/EUD.
Max. flange width of the trolleys is 310 mm, for DC 10 with U22 min. flange width of the trolleys 90 mm.
10) Not possible for KDC.
11) For DC 10-1250 1/1 the rolling beam with supporting roller for U22 / U34 must be used.
12) For DC 10-1000 1/1 from H31, the rolling beam with supporting roller U22 / U34 must be used owing to the deadweight of the chain.
13) Extension section 718 996 45 must used for counterweights with a Harting signal plug.
14) Flange width U11 min. 58 mm (for 716 502 45), U22 / U34 min. 90 mm, RU/EU56 min. 98 mm.
15) For RU / EU56 take into account additional adjusting ring set 716 854 45.
16) The counterweight sub-assembly comprises 2 longitudinal girders, for DC 1-5 1x counterweight, for DC 10-25 2x counterweights (use further counterweights in accordance with table, as required) and fastening material.
17) The suspension and supporting roller sub-assembly comprises various plates, travel wheel and fastening material.
18) Suspension via supporting roller for EU / RU 11 DK and/or EU / RU 22 DK trolleys on request.

1.13.2 Dimensions of chain collector box (for stationary or travelling DC chain hoists)

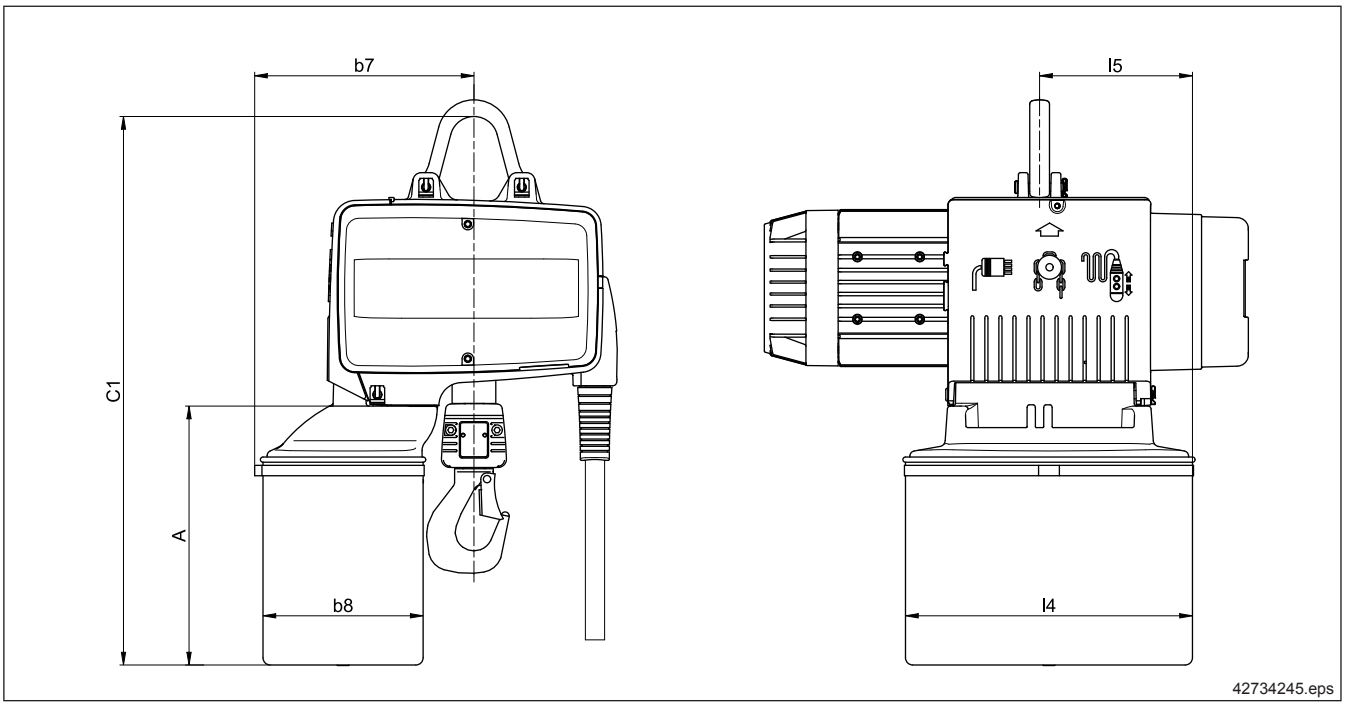

Chain hoist size	Reeving	Hook path [m]	A [mm]	C1 [mm]	l4 [mm]	l5 [mm]	b7 [mm]	b8 [mm]
DC 1/2	1/1	9-25 1)	220	461	256	137	193	152
		26-35	270	511				
		36-50	320	561				
		51-65	380	621				
DC 5		9-20 1)	250	529	276	129	203	154
		21-35	385	664				
		36-50	515	794				
		51-65	644	923				
DC 10		9-10 1)	300	631	336	146	257	196
		11-20 1)						
		21-30	345	676				
		31-40	420	751				
		41-50	495	826				
		51-60	608	939				
	2/1	6-10 1)	270	601	336	111	257	196
		11-15	345	676				
		16-20	420	751				
		21-25	495	826				
		26-30	608	939				
DC 15	1/1	27-40	500	790	380	190	284	220
	2/1	14-20					302	
DC 16	1/1	27-40	524	921	380	190	282	220
	2/1	14-20	524	921			291	
DC 25	1/1	19-30	524	921	380	190	282	220
		31-40	503	900	577	288	424	340
	2/1	10-15	524	921	380	190	291	220
		16-20	503	900	577	288	433	340

1) no suspension

20352544.indd/180713

1.13.3 Counterweight dimensions (for stationary DC chain hoists and on KBK)

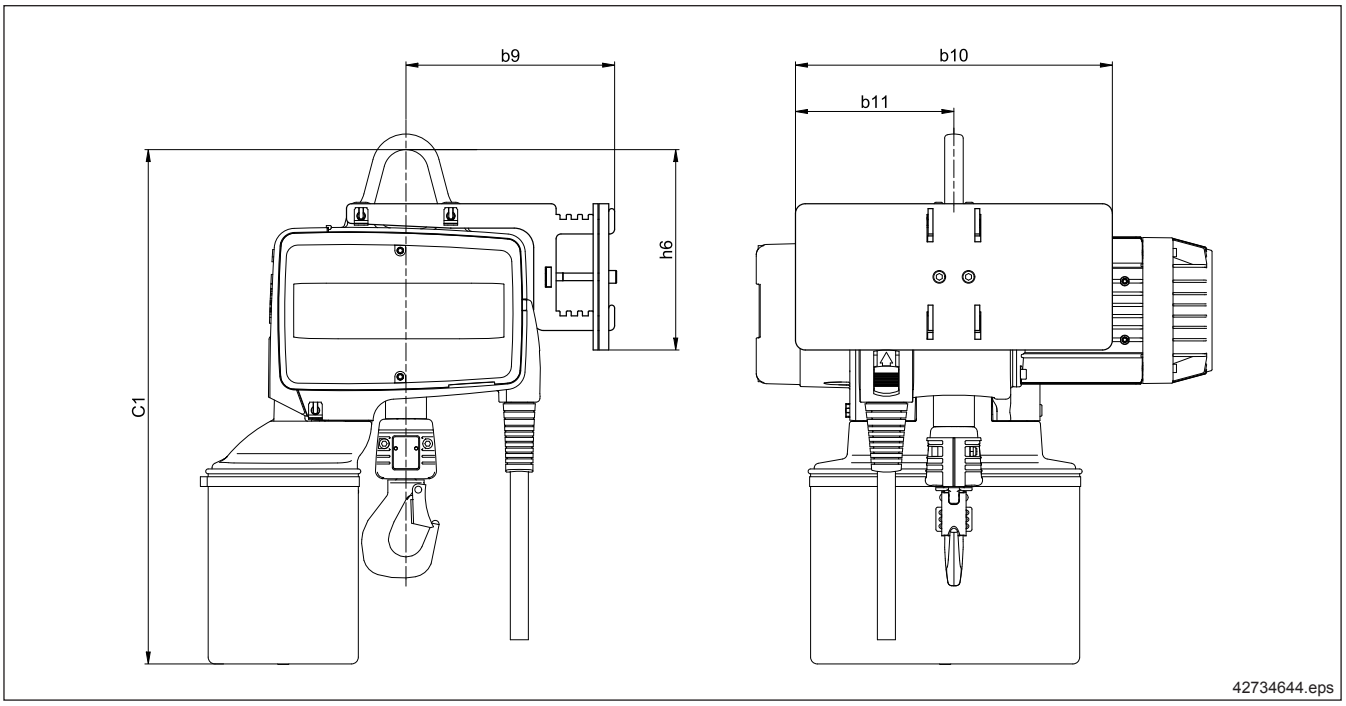

Chain hoist size	Reeving	Hook path [m]	C1 [mm]	b9 [mm]	b10 [mm]	b11 [mm]	h6 [mm]	Weight [kg]
DC 1/2	1/1	9-25 1)	461					
		26-35	511	214	325	162,5	206	5,2
		36-50	561					
		51-65	621					
DC 5		9-20 1)	529					
		21-35	664	214	325	162,5	206	5,2
		36-50	794					10,6
		51-65	923					16,0
DC 10		9-10 1)	631					
		11-20 1)						
		21-30	676	238	400	217	258	14,1
		31-40	751					19,6
		41-50	826					25,1
		51-60	939					30,6
	2/1	6-10 1)	601					
		11-15	676	238	400	217	258	14,1
		16-20	751					19,6
		21-25	826					25,1
		26-30	939					30,6
DC 15	1/1	27-40	790	305	500	250	365	60,0
	2/1	14-20		323				
DC 16	1/1	27-40	921	345				
	2/1	14-20	921					
DC 25	1/1	19-30	921					
		31-40	900					84,0
	2/1	10-15	921					60,0
		16-20	900					84,0

1) no suspension

1.13.4 Dimensions of suspension with supporting roller (for travelling DC chain hoists)

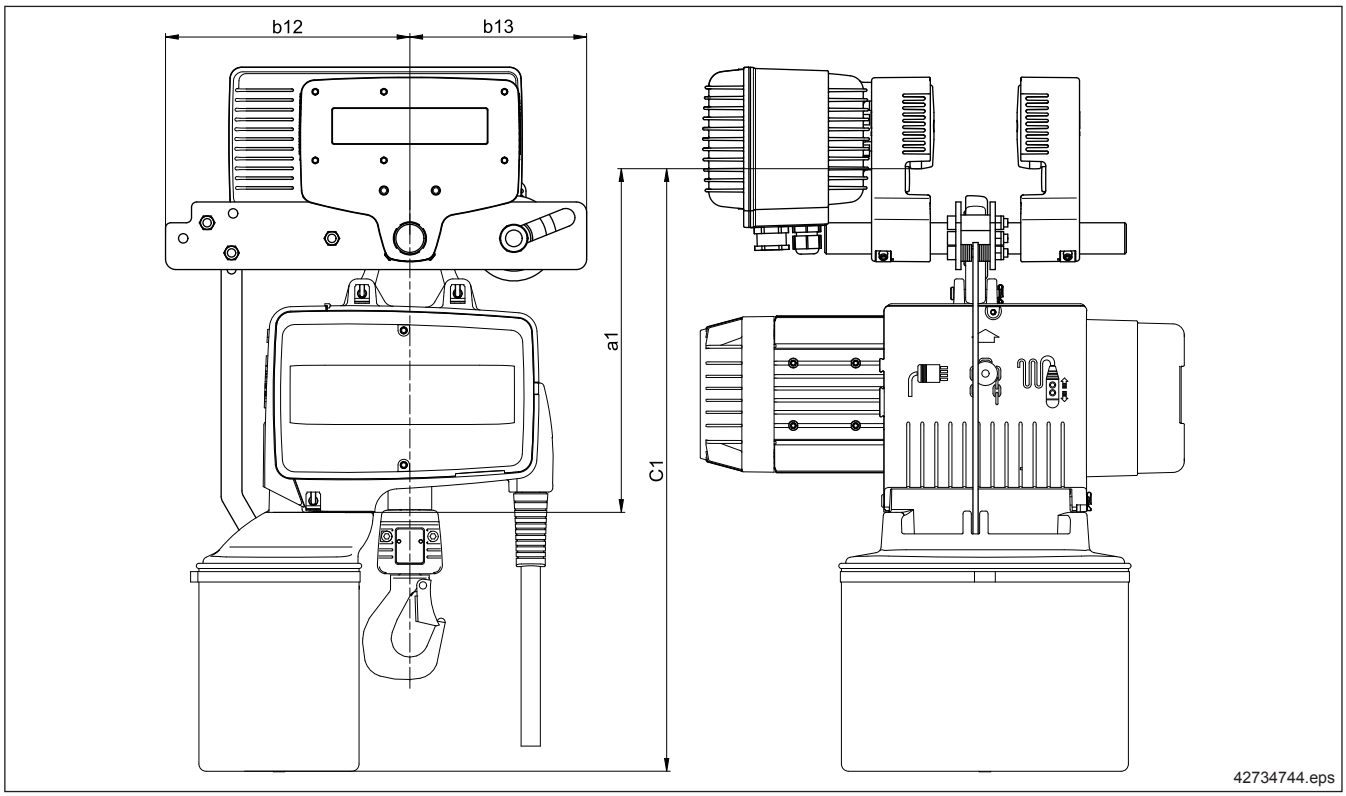

Chain hoists with chain collector with suspension and supporting roller are **not** suitable for:

- travel on curved tracks;
- in combination with clamp-fitted buffers;
- ZMS strain gauge carrier links.

Chain hoist size	Reeving	Trolley	Hook path [m]	C1 [mm]	a1 [mm]	b12 [mm]	b13 [mm]	Weight [kg]
DC 1/2	1/1	RU / EU11	9-25 1)	461				
			26-35	511	293	245	170	3,1
			36-50	561				
			51-65	621				
DC 5			9-20 1)	529				
			21-35	664	293	245	170	3,1
			36-50	794				
			51-65	923				
DC 10			9-10 1)	601				
			11-20 1)	601				
			21-30	676	383	245	170	4,2
			31-40	751				
			41-50	826				
			51-60	939				
	2/1	RU / EU22 RU / EU34	6-10 1)	601				
			11-15	676	383	245	170	4,2
			16-20	751				
			21-25	826				
			26-30	939				
DC 15	1/1	RU / EU34	27-40	854	456	250	260	10,7
	2/1		14-20					
DC 16	1/1	RU / EU34	27-40	985	461			
		RU / EU56		1000	477			
	2/1	RU / EU34	14-20	985	461			
		RU / EU56		1000	477			
DC 25	1/1	RU / EU34	19-30	985	461			
		RU / EU56		1000	477			
		RU / EU34 2)	31-40	964	461			
		RU / EU56 2)		973	477			
	2/1	RU / EU34	10-15	985	461			
		RU / EU56		1000	477			
		RU / EU34 2)	16-20	964	461			
		RU / EU56 2)		973	477			

1) no suspension
2) Sheet metal chain collector box

20352544.indd/180713

1.13.5 Chain hoist with tetragonal chain collector and additional trolley

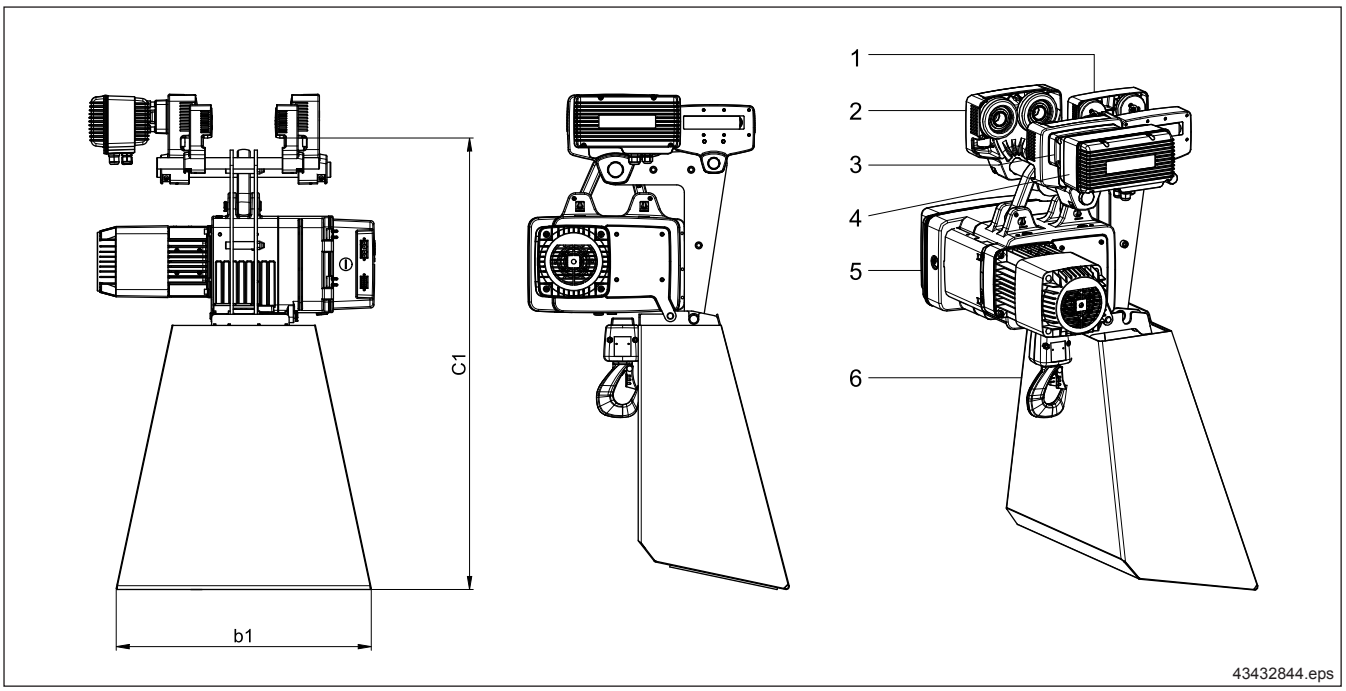

1 Additional trolley
2 Trolley
3 Dual-output gearbox
4 Travel drive
5 Chain hoist
6 Tetragonal chain collector

Chain hoist size	Reeving	Chain collector box size	Hook path H [m]	C1 [mm]	b1 [mm]	Part no.	Weight [kg]
Suspension with supporting roller required							
DC-Pro 16	1/1	Size 1	40	904	552	749 311 46	15,0
	2/1		20				
DC-Pro 25	1/1		30				
	2/1		15				
DC-Pro 16	1/1	Size 2	55	962	577	749 312 46	17
	2/1		27				
DC-Pro 25	1/1		40				
	2/1		20				
DC-Pro 16	1/1	Size 3	75	1020	602	749 313 46	19
	2/1		35				
DC-Pro 25	1/1		50				
	2/1		25				
DC-Pro 16	1/1	Size 4	85	1078	626	749 314 46	21,0
	2/1		42				
DC-Pro 25	1/1		60				
	2/1		30				
DC-Pro 16	1/1	Size 5	On request	1136	651	749 315 46	23,0
	2/1						
DC-Pro 25	1/1		70				
	2/1		35				
Additional trolley required							
DC-Pro 16	1/1	Size 6	On request	1196	676	749 593 46	25
	2/1						
DC-Pro 25	1/1		80				
	2/1		40				
DC-Pro 16	1/1	Size 11	On request	1512	811	760 648 46	40
	2/1						
DC-Pro 25	1/1						
	2/1						

1.14 Suspension

Standard suspensions

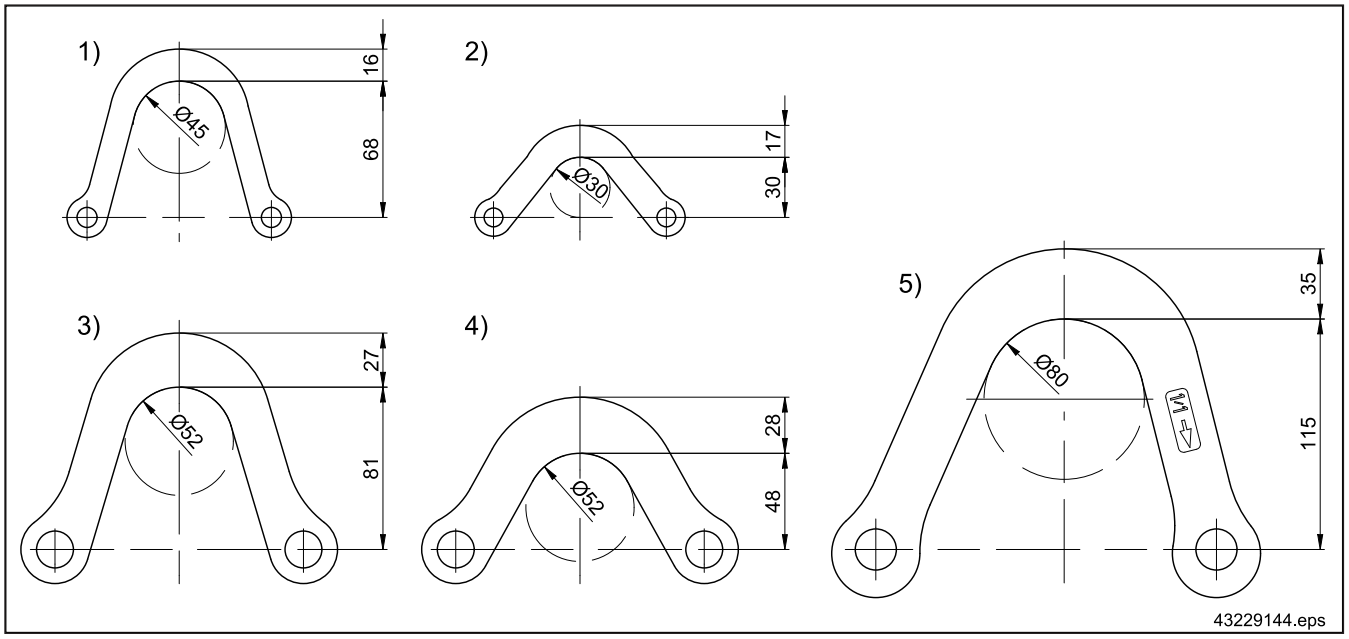

Item	Designation	Chain hoist size
1	Long suspension bracket	DC 1-5
2	Short suspension bracket	
3	Long suspension bracket	DC 10
4	Short suspension bracket	
5	Suspension bracket	DC 15 / 16-25

Optional suspensions

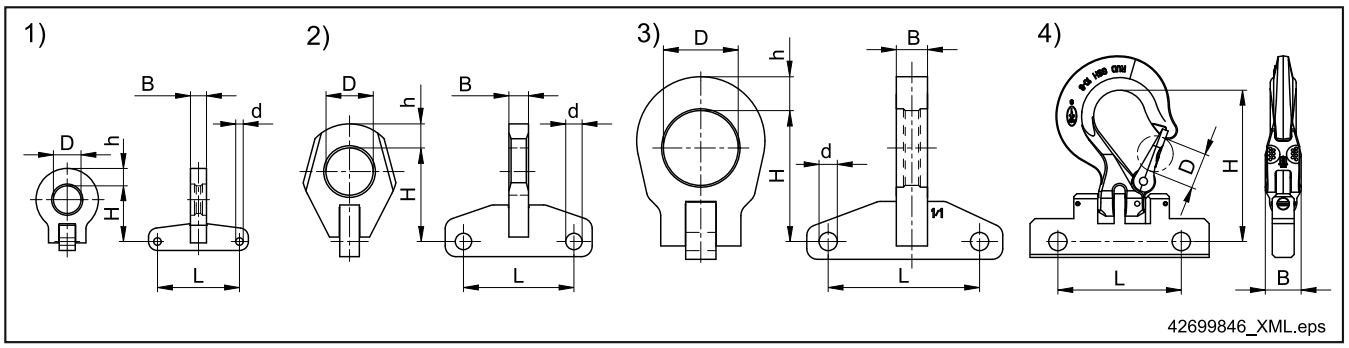

Item	Designation	Chain hoist size	Part no.	Dimensions [mm]					
				L	B	H	h	D	d
1	Suspension ring, for suspension parallel to the track girder	DC 1 - 5	718 278 45	92	18	62,5	19,5	31	8,4
2		DC 10	715 278 45	124	22	117	27	53	18,4
3		DC 16 - 25	721 278 45	170	35	147	38	84	20,5
4	Suspension hook, folding	DC 1 - 5	718 910 45	92	22	104	-	25	-
		DC 10	715 910 45	124	36	152	-	36	-
		DC 16 - 25	721 910 45	170	44,5	193	-	40	-
Not shown	Suspension bracket for KBK III up to 3200 kg	DC 15 - 16	721 870 45	Contour as for item 5 in ‘Standard suspension’					

Standard suspension assignment

Chain hoist load capacity [kg]					80-125	80-250	160-500	315-1250	1250-2500	1000-1600	2000-3200	1250-1600	2500-3200	2000-2500	4000-5000
Reeving					1/1				2/1	1/1	2/1	1/1	2/1	1/1	2/1
Trolley size	Trolley load capacity [kg]	Flange width [mm]	Flange thickness [mm]	Crossbar diameter [mm]	DC 1	DC 2	DC 5	DC 10		DC 15		DC 16		DC 25	
					Figure see 'Standard suspension'										
RU 3	450	60-90	12	21	1+2 11)	1+2 11)	1+2 1) 11)								
RU 6	450	58-143	20	30	1	1	1 1)								
		144-300	18	35											
	700	58-143	20	30	1	1	1								
		144-300	18	38											
RU / EU 11 DK	850	58-300	16	34											
	1350	58-143													
		144-300		45											
RU / EU 22 DK	2600	82-300	22	51				3 13)	3 13)	5 4)	5 4) 7)	5 4)			
RU / EU 36 DK 10)	3600	106-300	30	56							5	5	5	5	
RU / EU 55 DK 10)	5500	106-186		70											5
		187-300		82,5											
CF 5	550	50-91	15	16	1+2	1+2	1+2								
U / EU11	1100	58-200	22	30				3+4 5)							
		201-310													
U / EU22	2200	82-200	30 2)	40	1	1	1	3+4 5) 12)	3+4 6) 12)	5	5 9)	5			
U / EU34	2200	201-310													
	3400	82-310									5		5	5	
RU / EU56	5600	98-200	30	55				3 8)	3 8)						5
		201-310													
KBK															
Trolley 100		100			2	2	2								
Trolley I		300													
Trolley II		600						3+4 3)							
Trolley III		1300			1	1	1	3							
Articulated frame (double trolley) I		400													
Articulated frame (double trolley) II		1200						3							
Articulated frame (double trolley) III		2600							3	3 14)					
Crossbar 100		200			1	1	1								
Crossbar I		600													
Crossbar II		1400-2200						3							
Crossbar III		2600							3	3 14)					
Crab frame 100		200													
Crab frame I		600													
Crab frame II		1200/2400						3	3						
Crab frame III		3300								3 14)					

1) up to 400 kg
2) max. 28 mm for DC16/25
3) up to 500 kg
4) Flange thickness max. 15 mm
5) DC 10 - 1250 1/1 with U / EU22
6) DC 10 - 2500 2/1 with U / EU34
7) up to 2500 kg
8) DC 10 with RU / EU56 on request
9) up to 2200 kg
10) discontinued, no longer available
11) Short suspension bracket = from flange width 75 mm
12) Short suspension bracket = from flange width 170 mm
13) From flange width 120 mm
14) Suspension bracket for KBK III up to 3200 kg = Contour as for item 5 in 'Standard suspension'

2 Trolleys

2.1 Runway girder properties

Observe the following for application of our trolleys:

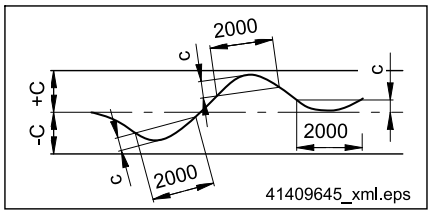

Position of a rail seen in elevation (longitudinal slope)

Designation of tolerances	Crane runways		
Tolerance C of the straightness with reference to the height of the crane rail centre and crane rail length. **Tolerance c** of the straightness with reference to 2000 mm measured length (sample measurement) at any point of the crane runway.	Tolerance class 1	C = ± 5 mm	c = 1 mm
	Tolerance class 2	C = ± 10 mm	c = 2 mm
	Tolerance class 3	C = ± 20 mm	c = 4 mm

Source: VDI 3576, recommendation: at least tolerance class 2

- The use of I-beams with parallel or sloping flanges according to DIN 1025 as tracks is possible. The manufacturing tolerance C with at least tolerance class 2 must be complied with for the runway. Steps and gaps on the joints must be avoided. Steps must be ground level, as required.
- Trolley travel on I-beam tracks must in no way be obstructed by protruding suspension pins, bolt heads, clamping plates and joint flanges, etc.
- In the area of the running surfaces of the trolley rollers, the track must only be given a primer coat with a coat thickness of 40 µm.
- In dirty environments, the running surfaces on the track should be cleaned at regular intervals; they should be free of oil and grease.
- Resilient buffers should be mounted at travel wheel axle level at the ends of tracks in order to prevent the trolley from derailing.
- Supporting rollers must be fitted to the trolleys if U11 / U22 / U34 / EU56 trolleys with ZBF motors are used with small flange widths.
- If several trolleys are operated on one girder, we recommend the use of trolley buffers to dampen any collisions between the trolleys.

2.2 General information on standard trolleys

Properties

The trolleys have the following product features:

- Infinitely variable adjustment of the flange width by means of adjusting rings,
- U 11 travel rollers made of plastic (optional steel rollers),
- U22 / U34 / RU56 travel rollers made of spheroidal graphite cast iron,
- Universal travel rollers for parallel and sloping running surfaces,
- Travel rollers without flanges, additional lateral steel guide rollers,
- Integrated drop stops in the individual die-cast aluminium halves,
- The side cheek surfaces are powder-coated.

U11 - U34 travel on curved track

The minimum permissible curve radius for push-travel trolleys is 1000 mm for U11 and 2000 mm for U22 /U34 trolleys. However, to ensure good travel characteristics and a longer trolley service life, we recommend that much larger curve radii be used, e.g. 1500 mm or 3000 mm, respectively.

The minimum permissible curve radius for electric-travel trolleys is 2000 mm (U11) and 3000 mm (U22 / U34).

Wear of the travel wheels depends greatly on the curve radius. I-beam tracks should be bent with the utmost care to obtain a clean, regular curve. The force required to move the load may be much higher on small curve radii in connection with heavy loads.

Trolleys with steel and spheroidal-graphite cast iron travel rollers

We recommend that steel travel rollers be used for:

- frequent travel on curved tracks,
- extreme ambient conditions (dirt accumulation, hot atmospheres, etc.),
- heavily worn girders,
- very heavy dead loads.

20352544.indd/180713

Articulated trolleys

The travel wheels and guide rollers of four-wheel trolleys may display increased wear in installations featuring intensive operation, we recommend the use of two-wheel articulated trolleys for:

- frequent travel on curved tracks witt small curve radii (1000 mm) and high load capacities,
- automatic operation in connection with travel on curved tracks, small curve radii (1000 mm) and high load capacities.

2.3 Curve radii for standard trolleys

The specified curve radii apply for normal applications.

Contact the manufacturer or his representative for frequent curve travel operation (e.g. automatic installations).

Trolley size		Load capacity	Push travel		Electric travel		Travel wheel material
Push-travel trolley	Travel drive / travel motor	[kg]	Flange width of girder [1] [mm]	R_{min} [mm]	Flange width of girder [1] [mm]	R_{min} [mm]	
CF 5		550	50-91	800	-	-	Plastic
U11	E11	1100	58-310	1000	58-310	2000	Plastic [2]
U22	E22	2200	82-200 [3]	2000	82-200 [3]	3000	Spheroidal-graphite cast iron [4]
U34	E34	2200	201-310 [5]		201-310 [5]		Spheroidal-graphite cast iron
		3400	82-310 [5]		82-310 [5]		
RU56	EU56	5600	98-310	2000 [6]	98-310	2500 [6]	

2.4 Cross and long-travel speeds

Load capacity [kg]	Chain hoist size DC-Pro [8]	Reeving	Possible cross-travel speeds in approx. ... m/min	Trolley [7]	Travel drive / travel motor
125	1	1/1	20/5	U11	ZBF 63 A 8/2
250	2	1/1	24/6	U11	E11
500	5	1/1	40/10	U11	ZBF 63 A 8/2
1000	10	1/1	12/4	EU56	ZBF 80 A 12/4
			20/5	U11	ZBF 63 A 8/2
			24/6	U11	E11
				EU56	ZBF 71 A 8/2
			40/10	U11	ZBF 63 A 8/2
				EU56	ZBF 80 A 8/2
1250	10	1/1	12/4	EU56	ZBF 80 A 12/4
1600	15	1/1	20/5	U22	ZBF 63 A 8/2
1600	16	1/1	24/6	U22	E22
2000	10	2/1		U34	E22
2000	15	2/1		EU56	ZBF 71 A 8/2
			40/10	U22	ZBF 71 A 8/2
				EU56	ZBF 80 A 8/2
2500	10	2/1	14/3,5	U34	E34
2500	25	1/1	12/4	EU56	ZBF 80 A 12/4
3200	15	2/1	20/5	U34	ZBF 63 A 8/2
3200	16	2/1	24/6	EU56	ZBF 71 A 8/2
			40/10	U34	ZBF 80 A 8/2
				EU56	ZBF 80 A 8/2
4000	25	2/1	12/4	EU56	ZBF 80 A 12/4
			24/6	EU56	ZBF 71 A 8/2
			40/10	EU56	ZBF 80 A 8/2
5000	25	2/1	12/4	EU56	ZBF 80 A 12/4
			24/6	EU56	ZBF 71 A 8/2
			40/10	EU56	ZBF 90 B 8/2

1) Max. flange width 500 mm (except CF 5)
2) Steel travel rollers optional
3) Flange width for DC 16 - 25 = 90 - 200 mm
4) Plastic travel wheels on request
5) Flange width for DC 16 - 25 = 90 - 310 mm
6) From flange width 106 mm
7) Application of U11 - U34 trolleys in combination with ZBF motors is only possible with a VGZ11-34 dual-output gearbox.
8) A special crossbar is needed when DC-Pro 10 units are combined with EU56 trolleys

2.5 CF 5 trolley

Max. load capacity 550 kg
for girders to DIN 1025, part 1 + 5

Suitable for
Demag chain hoist:
DC-Pro 1 - 80 to 125,
DC-Pro 2 - 80 to 250,
DC-Pro 5 - 80 to 500

For further information, please refer to the 'CF5-DC/DCM trolley technical data', table page 17.

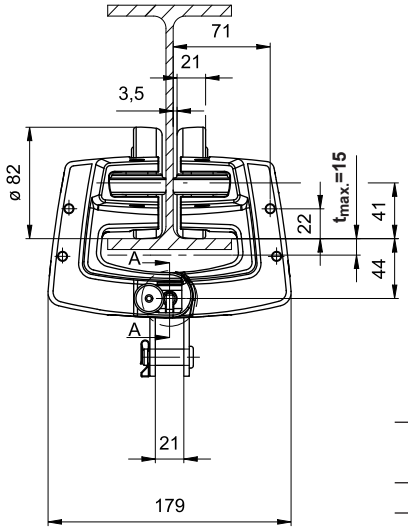

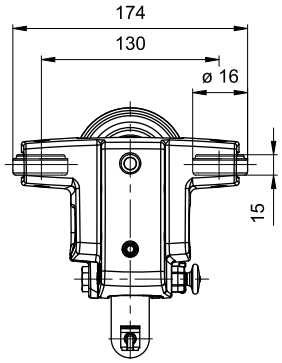

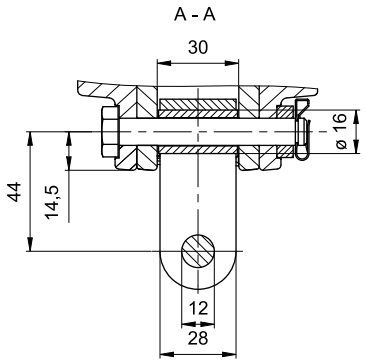

Designation	Max. flange thickness t [mm]	Flange width [mm]	Part no.	Weight [kg]
CF 5	15	50 - 91	840 007 44	2,6

CF 5 universal stirrup
Part no. 840 045 44

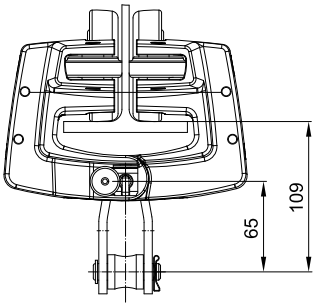

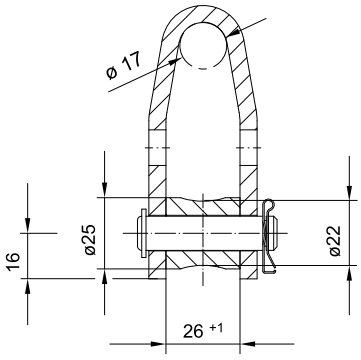

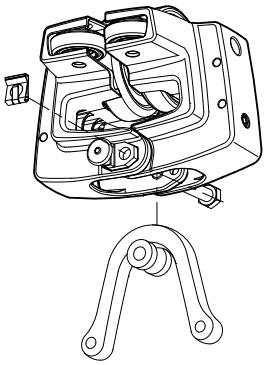

Girder connections by means of fish plates not permitted in the area of the guide rollers

Chain hoist parallel to the track girder

The long suspension bracket of the DC chain hoist must be used.

41777948.eps

2.6 U11 trolley

Max. load capacity 1100 kg
for girders to DIN 1025, part 1 + 5

Suitable for Demag chain hoist
≤ 1000 kg load capacity:
DC 1, DC 2, DC 5
DC 10 up to 1000 kg
DCM 1, DCM 2, DCM 5
DKUN 1, DKUN 2, DKUN 5, DKUN 10

For further information, please refer to the 'U11-U34/DC/DCM/DK trolley technical data', table page 17.

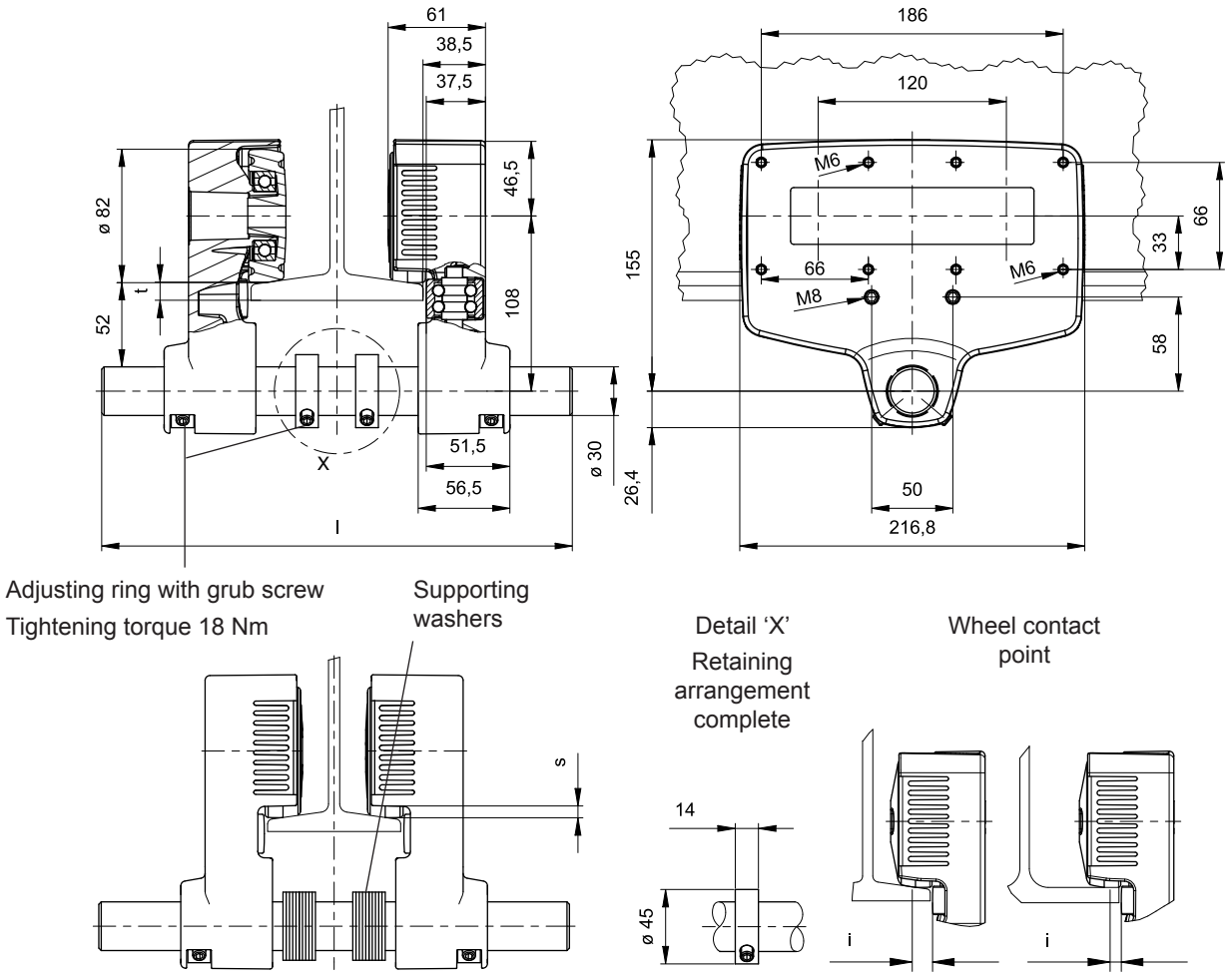

42781345.eps

Pay attention to clearance dimension for girder connection by means of fish plates.
Total play between adjusting rings and suspension bracket: U11 = 4 - 8 mm.
Travel wheel material: Plastic, steel travel rollers optional

Designation	Load capacity [kg]	Part no.	Flange width [mm]	Max. flange thickness t [mm]	Crossbar l [mm]	Sloping flange i [mm]	Sloping flange s [mm]	Parallel flange i [mm]	Parallel flange s [mm]	Weight [kg]	Runway girder curve radii Push travel R_{min} [mm]	Runway girder curve radii Electric travel R_{min} [mm]
U11 - 200	1100	716 502 45	58 - 200	22	320	13	min. 3 to 6	7,8	min. 4 to 7	7,3	1000	2000
U11 S - 200		716 507 45								9,0		
U11 - 310		716 503 45	201 - 310		430					7,7		
U11 - 500		On request	311 - 500		620					9,9		

Screws for fittings	Tightening torque [Nm]	Thread depth min. [mm]	Thread depth max. [mm]
M6	9	12	17
M8	18	16	21

No. of supporting washers	Flange width [mm] 58	66	74	82	90	98 - 310
DC 1-5, DCM 1-5	10	Adjusting rings				
DKUN 1-2						
DKUN 5	10					
DC 10 1/1	8					
DKUN 10	8					

2.7 U22 / U34 trolley

Max. load capacity 2200 kg / 3400 kg
for girders to DIN 1025, part 1 + 5

Suitable for Demag chain hoist
≤ 2000 kg load capacity:
DC 1 - 10, DCM 1 - 5, DKUN 5 - 10
≤ 3400 kg load capacity:
1/1 reeving: DC 16 - 25
2/1 reeving: DC 10 - 16
DKUN 16 - 20

For further information, please refer to the 'U11-U34/DC/DCM/DK trolley technical data', table page 17.

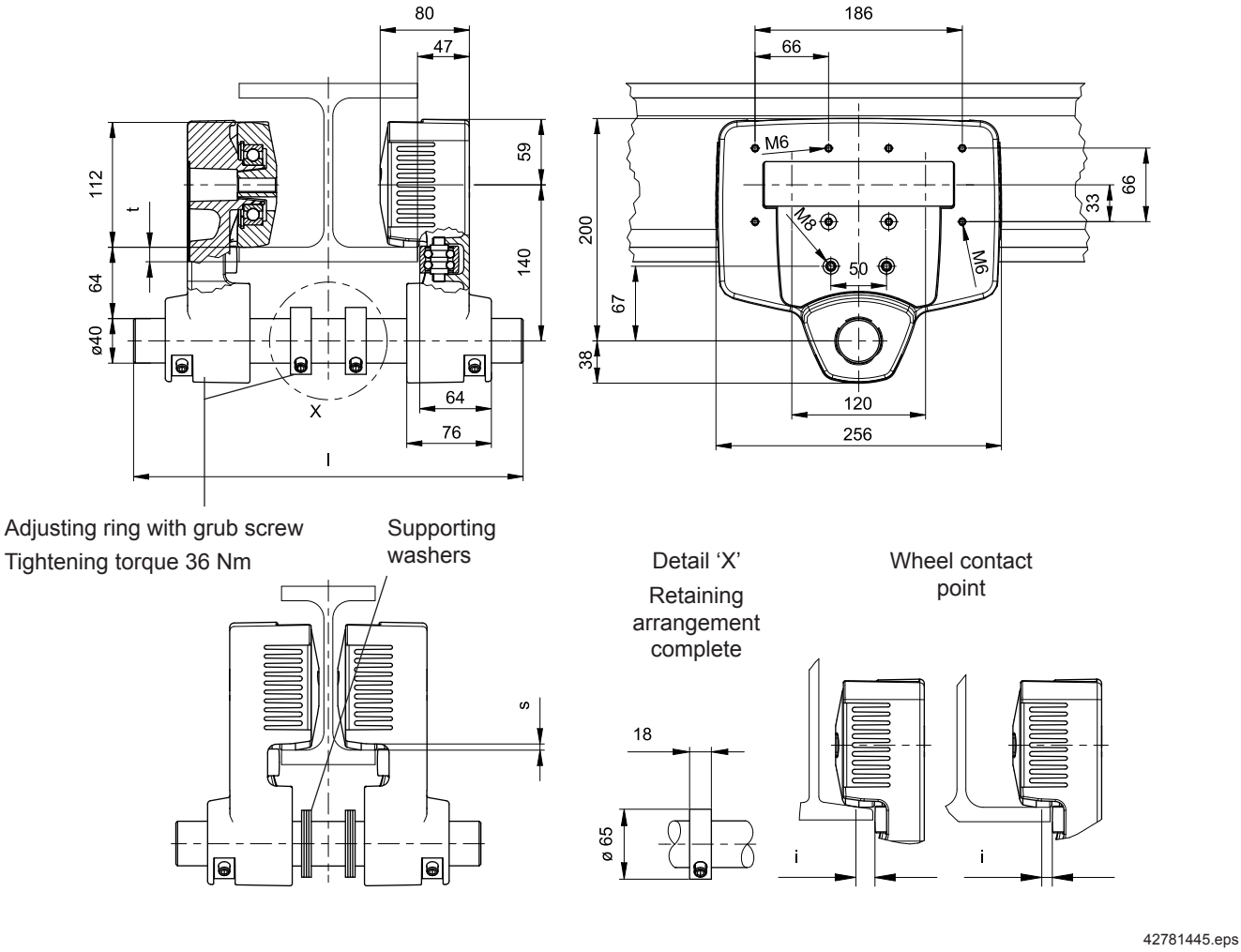

Pay attention to clearance dimension for girder connection by means of fish plates.
Total play between adjusting rings and suspension bracket: U22 / U34 = 6 - 12 mm.
Travel wheel material: Spheroidal graphite cast iron, plastic travel rollers on request

Designation	Load capacity [kg]	Part no.	Flange width [mm]	Max. flange thickness t 1) [mm]	Crossbar l [mm]	Sloping flange i [mm]	Sloping flange s [mm]	Parallel flange i [mm]	Parallel flange s [mm]	Weight [kg]	Runway girder curve radii Push travel R_{min} [mm]	Runway girder curve radii Electric travel R_{min} [mm]
U22 - 200	2200	716 602 45	74 - 200	30	350	17	min. 2 bis 6	9,5	min. 1 bis 5	14,5	2000	3000
U22 - 500		On request	311 - 500		625					19,8		
U34 - 310	2200 3400	716 703 45	201 - 310 82 - 310		460					15,5		
U34 - 500	3400	On request	311 - 500		600					20,8		

1) for DC 16 - 25 max. 28 mm

Screws for fittings	Tightening torque [Nm]	Thread depth min. [mm]	Thread depth max. [mm]
M6	9	12	17
M8	18	16	21

No. of supporting washers	Flange width [mm] 82	Flange width [mm] 90	Flange width [mm] 100 - 310
DC 1-5, DCM 1-5, DKUN 5			
DC 10	14		
DC 16 - 25	8	12	Adjusting rings
DKUN 10 / 16	14		
DKUN 20	12		

20352544.indd/180713

2.8 E11 / E34 travel drive

220-480 V, 50 / 60 Hz, 3 ~

Suitable for trolleys:
U11 - U34
KBK RF 125

For further information, please refer to the 'E11-E34 DC (I)+(II) travel drive assembly instructions', table page 17.

Design overview

1 DC worm geared motor
2 Control card
3 Housing lower part
4 Housing cover
5 Housing cover safety retainer
6 Plug-in module with unions
7 Cover plate of control card

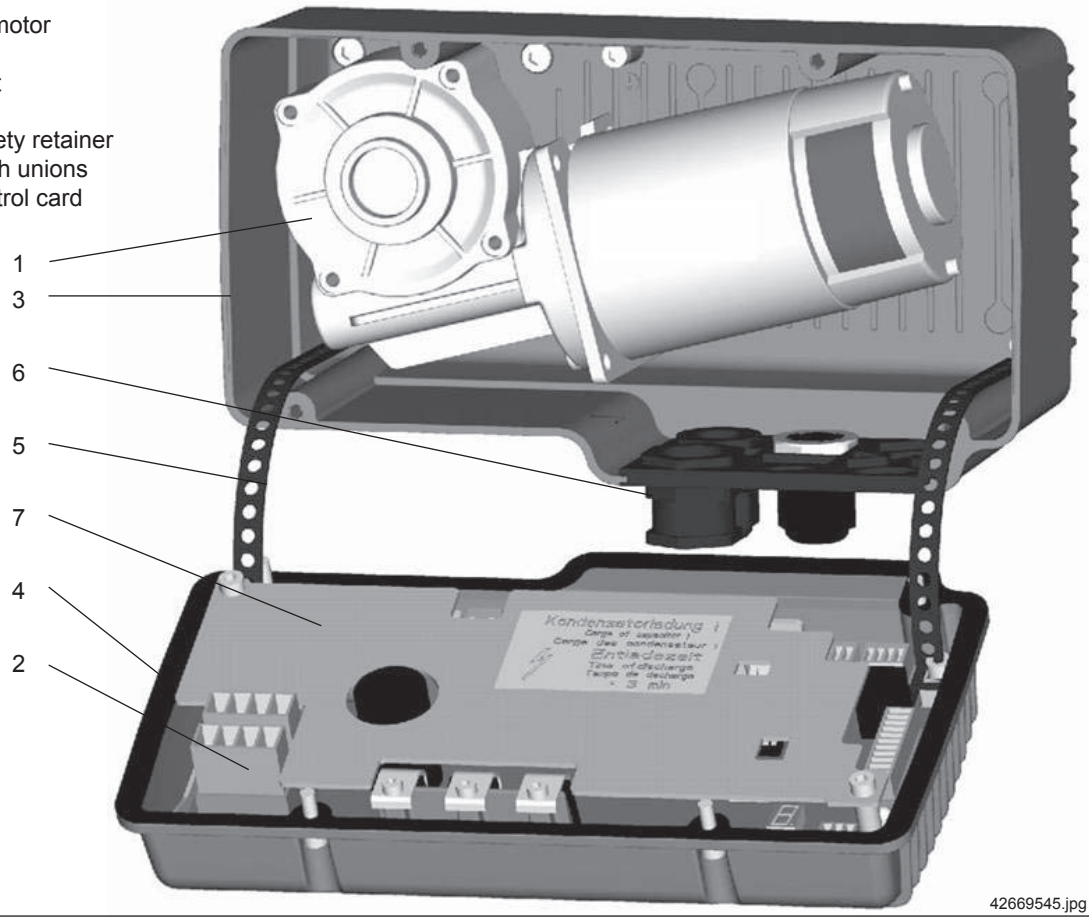

Selection table

E22-C with speed control for crane travel drives in preparation.

Max. displaceable weight incl. dead weight 2) [kg]	Travel drive Type	Travel speed at 50/60 Hz 1): Steps: v_{rated} at full load [m/min]	Steps: v_{max} at partial load 3) [m/min]	Stepless: v at full load [m/min]	Stepless: v at partial load 3) [m/min]	Possible trolleys	Part no.	Max. weight [kg]
1100	E11	24/6	30/7,5	1,2 - 24	1,5 - 30	U11	716 570 45	4
2200	E22					U22 / U34	716 590 45	5
		27/7	33/8	1,4 - 27	1,65 - 33	RF 125		
3400	E34	14/3,5	-	0,7 - 14	-	U34	716 740 45	

Electric key values

Size	Motor size	Min. / max. currents and start-up current							
						220-480 V, 50 / 60 Hz, 3 ~ (CE/CSA) 4)			
		P_N [kW]	CDF [%]	n_N [rpm]	Starts/h	$I_{N\,220}$ [A]	$I_{N\,480}$ [A]	$I_{max\,220}$ [A]	$I_{max\,480}$ [A]
E11	MP 56 M	0,025	20	862	240	0,3	0,15	1,3	0,65
		0,1	40	3450	120	1,1	0,55	2,6	1,3
E22	MP 56 L	0,05	20	630	240	0,5	0,24	1,16	0,58
		0,2	40	2525	120	1,8	0,9	4,3	2,15
E34	MP 56 XL	0,04	20	478	240	0,5	0,24	1,16	0,58
		0,15	40	1914	120	1,6	0,8	3,8	1,9

1) In connection with DCS (stepless) from 0,5 m/min to v_{max}
2) Max. gradient 1%, > 1% on request
3) Possible by programming other parameters
4) A short-term voltage tolerance of +5% and -10% is possible. Motors are designed in compliance with insulation class F.

Properties

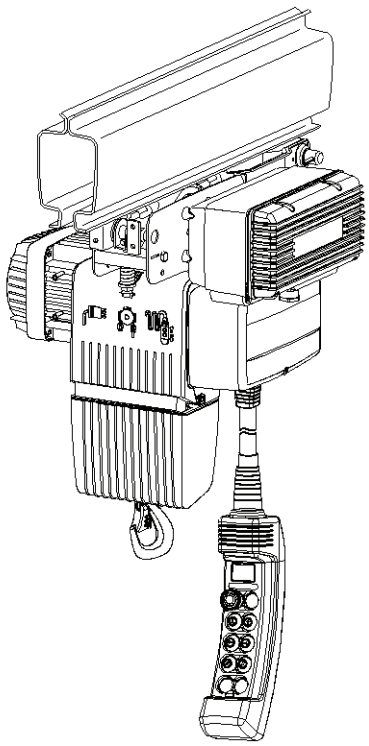

42670747.jpg

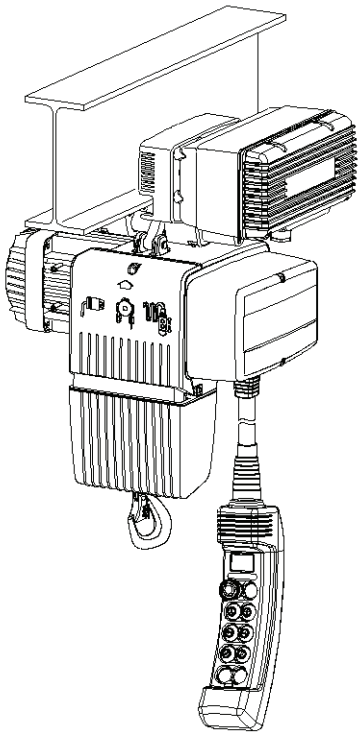

42670746.jpg

- IP 55 type of enclosure;
- Ambient temperature -20 °C to +40 °C;
- Temperature monitoring;
- 7-segment display for operating status, error messages, parameter programming;
- All electric connections are of plug-in design;
- Inputs for limit switches and fast-to-slow limit switches are integrated into the control card;
- Smooth starting via ramps;
- For voltages from 480 V - 575 V, a single-phase isolating transformer with the following technical data must be integrated into the line power supply:

Type:	TTT 0,25
Voltage, primary:	575 V
Voltage, secondary:	230 V
Output:	250 VA

- E11 - E34 is fitted to the relevant U11 - U34 trolley;
- E22 can also be fitted to the new RF 125 friction wheel travel drive;
- The travel drive is designed to match the electrical concept of the DC chain hoist;
- Line voltage relayed from the travel drive to the chain hoist;
- Signal transmission in steps with 24 V tri-state signals for controlled DC chain hoists (half-wave evaluation);
- Stepless signal transmission with 0 – 24 V PWM (pulse width modulation) signals in connection with stepless DCS chain hoists.

E11 - E34 units are shipped ready for operation.

The following settings are also possible:

- Travel speed, acceleration and braking parameters via DSE-10C/CS control pendant;
- Infinitely variable cross-travel speed only in connection with DCS-Pro and DSE-10CS.

The following are provided for the electric connection between the chain hoist and the trolley travel drive:

DC 1-15

Control cable set (part no. 720 070 45) and

Power supply cable (part no. 720 072 45);

DC 16-25

Power/control cable set (part no. 720 369 45).

E11 - E34 travel drive on U11 - U34 trolley

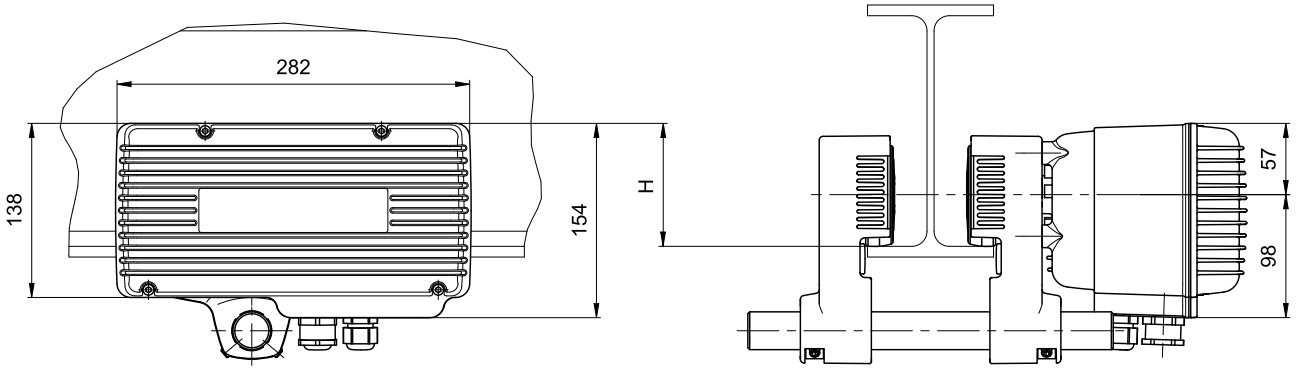

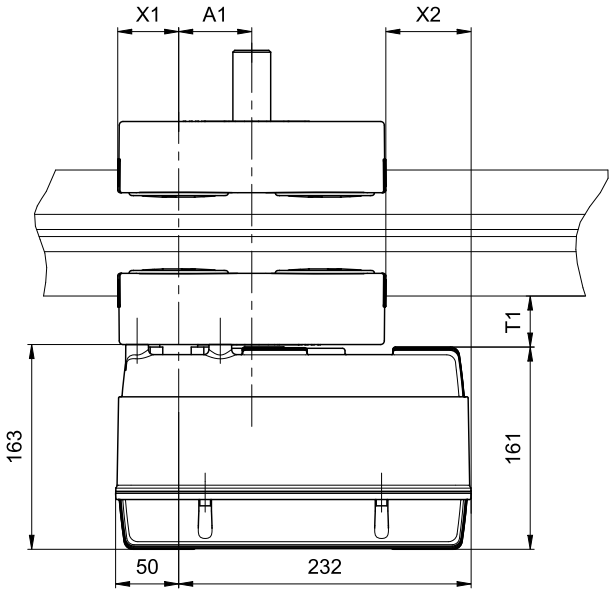

Trolley	A1 [mm]	B [mm]	H [mm]	X1 [mm]	X2 [mm]	X3 [mm]	T1 [mm]
EU11	58	273	98	50	68	115	41
EU22 EU34	60	288	112	68	44	117	49

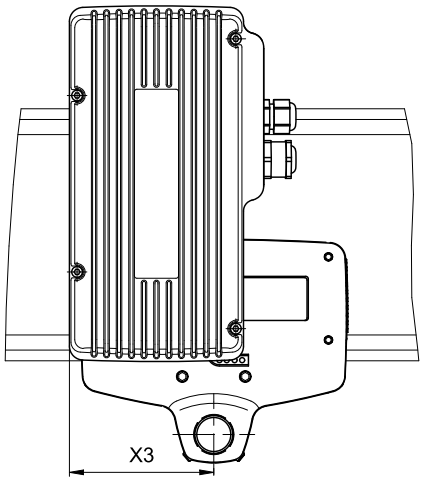

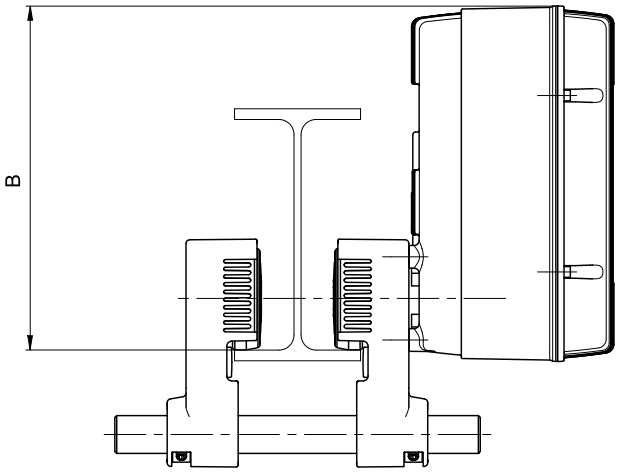

42669454_xml.eps

Pay attention to the following:

- Application as a long travel drive on bottom flanges is not recommended because of the single-wheel drive.
- Vertical mounting of the drives E11 to E34 in combination with a dual-output gearbox is not possible.
- We recommend horizontal mounting of the travel drive for outdoor operation.

E 22 travel drive on KBK RF 125

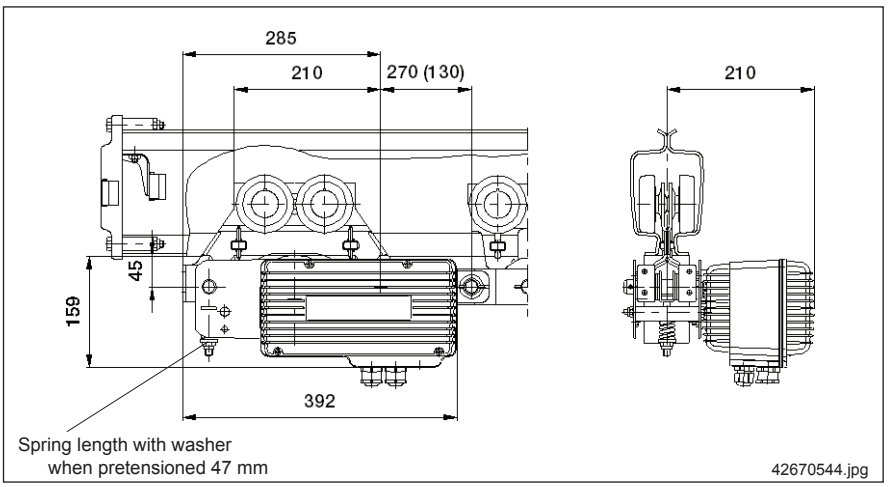

For further information, please refer to the 'KBK classic (steel, powder-coated) technical data', table page 17.

2.9 Dual-output gearbox for E11 - E34 travel drive

Trolley				Dual-output gearbox	
Size	Flange width [mm]	Part no.	Weight [kg]	Part no.	Weight [kg]
U11 - 200	58 - 200	716 502 45	7,3	716 680 45	2,2
U11 S - 200		716 507 45	9,0		
U11 - 310	201 - 310	716 503 45	7,7		
U22 - 200	82 - 200	716 621 45	13,6		
U34 - 310	82 - 310	716 731 45	14,6		

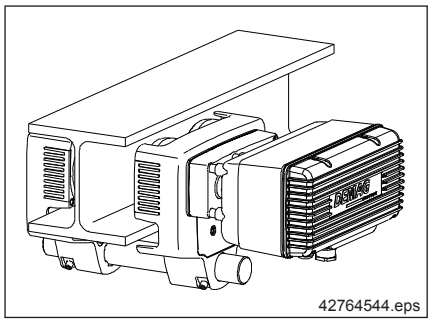

In the case of U11-34 trolleys with E11-34 travel drives, 1 travel wheel is driven. Under certain ambient conditions, e.g. travel track contaminated with oil, it may be necessary to drive more than one travel wheel. The VG dual-output gearbox is used for driving both travel wheels on the driven side cheek.

Older trolley designs cannot be combined with the dual-output gearbox, as they partly have only one travel wheel that can be driven per trolley (U22-34) or different axle centre distances (U11). If all 4 travel wheels are to be driven, 2 separately driven side cheeks, 1 crossbar and 2 drives and 2 dual-output gearboxes must be ordered.

If a dual-output gearbox is fitted between trolley and travel drive, the travel drive protrudes in addition 51 mm beyond the girder.

For further information, please refer to the 'VG11-34 EU11-34 dual/output gearbox assembly instructions', table page 17.

2.10 EU11 - EU34 trolley with three-phase AC ZBF motor

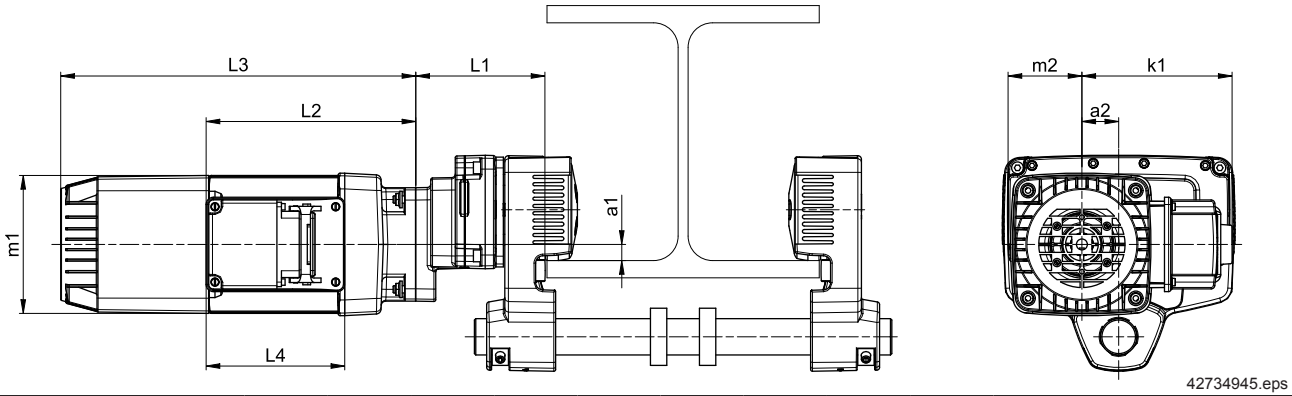

Trolley size	Motor	a1 [mm]	a2 [mm]	m1 [mm]	m2 [mm]	k1 [mm]	L1 [mm]	L2 [mm]	L3 [mm]	L4 [mm]	Weight for flange width 1) ≤ 200 mm [kg]	Weight for flange width 1) > 200 - 310 mm [kg]
EU11	ZBF 63	3,44	40,53	140	70	124	134	218	335	153	22,6	23,0
EU22 / EU34	ZBF 63	18,44					142				29,8	30,8
	ZBF 71										32,0	33,0
	ZBF 80			157	80	134		231	391		39,3	40,3

Designation	Trolley size / Load capacity [kg]	EU11 1100	EU22 2200	EU34 3400	Motor type 3)	Part no.	Weight [kg]
		Travel speed [m/min]					
1 VG11-34 ZBF travel gearbox cpl. without trolley and motor		16/4			ZBF 63 A 8/2	716 750 45	5,3
			20/5				
				20/5			
		20/5			ZBF 63 A 8/2	716 751 45	
			28/7				
				28/7	ZBF 71 A 8/2		
		30/7,5			ZBF 63 A 8/2	716 752 45	
			40/10		ZBF 71 A 8/2		
				40/10	ZBF 80 A 8/2		
		40/10			ZBF 63 A 8/2	716 753 45	
			50/12,5		ZBF 71 A 8/2		

Example for ordering
EU11 cpl. up to flange width 310 mm
Consisting of:
1 U11 - 310 trolley complete
1 Travel motor with specification of voltage and type of enclosure
1 Travel gearbox in accordance with speed and load capacity assignment

Supporting roller fitting
Supporting rollers need to be fitted to the trolleys for smaller flange widths in combination with the larger motors. Supporting rollers are required for the trolleys in the following cases:
- **with ZBF 80 motors up to flange width 130,**
- **with ZBF 90 motors up to flange width 200.**

Cross-travel unit control
For connecting an AC motor to the DC-Pro 16/25 chain hoist, a crab module (part no. 720 335 45) is required. The crab module and the Polu-box (DC 1-15) already include the brake control. For voltages > 500 V, the GF brake module is used and the motor is delivered with fitted star point.

Long-travel unit control
An additional GF brake module must be taken into account.

1) for steel travel rollers +1,7 kg
2) Further speeds on request
3) see also section 2.13

2.11 EU 11 DK / EU 22 DK trolley with PKF three-phase AC motor

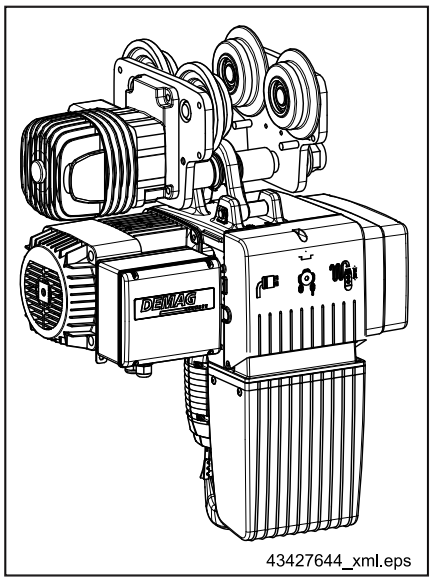

Trolley sizes 11 and 22 of the predecessor DK generation may be used as an alternative to EU11 - EU34 units with ZBF motor, depending on the application.

For control, the Polu-box operates as the contactor control system for the trolley and converts the travel signals of the DC 1 - 15 into electrical travel output.

For further information, please refer to the 'Electrical accessories Polu-box technical data', 'EU 11 DK trolley operating instructions' and 'EU 22 DK trolley operating instructions', table page 17.

2.11.1 Curve radii

The specified curve radii apply for normal applications.

Use RUD / EUD trolleys for frequent curve travel operation (e.g. automatic installations).

Curve radii in mm

Trolley size	Runway girder			
	Round edges		Sharp edges	
	Flange width	R_{min}	Flange width	R_{min}
RU 11 DK EU 11 DK	58-300	1800	58-300	2000
RU 22 DK EU 22 DK	82-143 144-200 201-300	2300 1900 1300	82-300 - -	2575 - -

2.11.2 Travel speeds

Travel drive			Possible cross-travel speeds in approx. ... m/min				
			28	14	7	7/28	4,6/14
			13/3 PKF 2	13/3 PKF 4	13/3 PKF 8	13/6 PKF 8/2	13/6 PKF 12/4
Part no.	Voltage	230/400 V	563 062 44	563 064 44	563 067 44	-	-
		400 V	-	-	-	563 057 44	563 056 44

2.11.3 Travel motor data

EU standard-headroom monorail hoist

Size	P_N	CDF	n_N	Rated current I_N and start-up current $_A$ for 50 Hz						cos φ_N	cos φ_A
				230 V		400 V		500 V			
				I_N	I_A	I_N	I_A	I_N	I_A		
	[kW]	[%]	[rpm]	[A]	[A]	[A]	[A]	[A]	[A]		
13/3 PKF 2	0,2	40	2890	1,1	5,7	0,63	3,3	0,46	2,4	0,73	0,74
13/3 PKF 4	0,14	40	1390	0,77	2,6	0,44	1,5	0,32	1,1	0,76	0,74
13/3 PKF 8	0,05	40	710	0,95	2,2	0,55	1,3	0,4	0,91	0,48	0,7
13/6 PKF 8/2	0,07/0,27	40	680/2900	1,3/1,8	2,6/8,6	0,74/1,1	1,5/5,0	0,53/0,76	1,1/3,6	0,57/0,71	0,86/0,86
13/6 PKF 12/4	0,05/0,17	20/40	450/1440	2,2/1,8	2,8/6,2	1,3/1,1	1,6/3,6	0,91/0,76	1,2/2,8	0,66/0,55	0,82/0,86

20352544.indd/180713

2.11.4 EU 11 DK trolley

Suitable for Demag chain hoist

DC 1 - 10 **1/1 reeving**

DCM 1 - 5 **1/1 reeving**

DC 10 not suitable

Only with long suspension bracket

Pay attention to flange thickness -t-

Standard-headroom monorail hoist

Max. load capacity 1350 kg [1)]

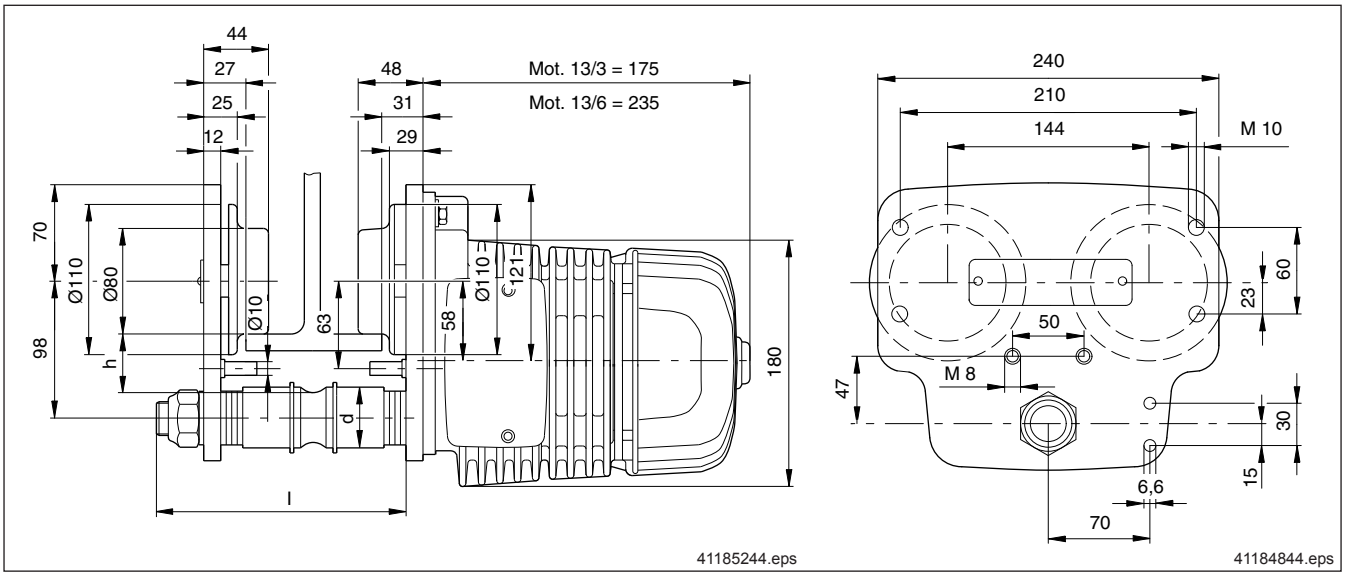

Flange width	b mm	58	66	74	82	90	91	98	106	113	119	125	131	137	143
Max. flange thickness	t mm	16 / without anti-run-off device 22 mm													
Crossbar	l mm	171					224								
Dimension	d mm	34													
	h mm	43													
		Position of the distance washers (distance washer 4 mm) Required number of distance washers													
Left side cheek	inside	-	1	2	3	4	-	1	2	3	4	4	5	6	7
	outside	9	7	5	3	1	14	12	10	8	7	5	4	2	1
Right side cheek	inside	1	2	3	4	5	1	2	3	4	4	6	6	7	7
Weight without electric equipment	without/with travel drive	14,2/27,2					14,5/27,5								
Crossbar cpl. with supporting roller		839 523 44					839 524 44								
Trolley cpl.		840 104 44													

Flange width	b mm	144	149	155	163	170	178	185	200	201	210	220	240	260	280	300
Max. flange thickness	t mm	16 / without anti-run-off device 22 mm														
Crossbar	l mm	281								381						
Dimension	d mm	45														
	h mm	37														
		Position of the distance washers (distance washer 4 mm) Required number of distance washers														
Left side cheek	inside	-	1	1	2	3	4	5	7	-	1	3	5	8	10	13
	outside	15	13	12	10	8	6	4	-	26	23	21	16	11	6	1
Right side cheek	inside	1	2	3	4	5	6	7	9	1	3	3	6	8	11	13
Weight without electric equipment	without/with travel drive	15,4/28,4								16,5/29,5						
Crossbar cpl.		839 544 44								839 545 44						
Trolley cpl.		840 104 44														

1) If loads close to the maximum load are frequently moved, we recommend that the next larger size trolley be used.

Example:
Ordering an EU 11 DK standard-headroom monorail hoist for flange width 90 mm
Travel speed approx. 14 m/min, 230/400 V, 50 Hz

1	Crossbar	part no.	839 523 44
1	Trolley	part no.	840 104 44
1	Travel drive	part no.	563 064 44

2.11.5 EU 22 DK trolley

Suitable for Demag chain hoist

	Reeving
DC 10 [2]	**1/1 and 2/1**
DC 15 / 16	**1/1 and 2/1**

Standard-headroom monorail hoist

Max. load capacity 2600 kg [1]

Pay attention to flange thickness -t-

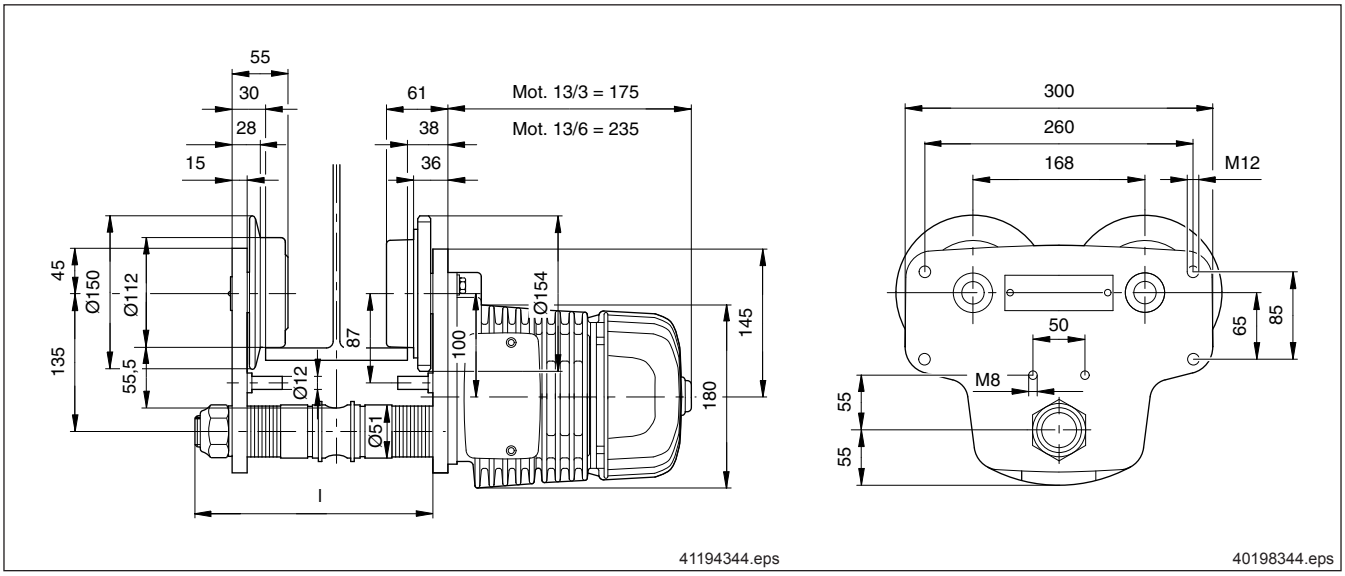

Flange width	b mm	82	90	98	106	113	119	125	131	137	143
Max. flange thickness	t mm	22 / without anti-run-off device 28 mm (DC 15 / 16 t = 15 mm)									
Crossbar	l mm	235									
		Position of the distance washers (distance washer 4 mm) Required number of distance washers									
Left side cheek	inside	1	2	3	4	5	5	6	7	8	8
	outside	16	14	12	10	8	7	5	4	2	1
Right side cheek	inside	2	3	4	5	6	7	8	8	9	10
Weight without electric equipment	without/with travel drive	27,2/40,2									
Crossbar cpl.		839 563 44									
Trolley cpl.		840 114 44									

Flange width	b mm	144	149	155	163	170	178	185	200	201	210	220	240	260	280	300
Max. flange thickness	t mm	22 / without anti-run-off device 28 mm (DC 15 / 16 t = 15 mm)														
Crossbar	l mm	292								392						
		Position of the distance washers (distance washer 4 mm) Required number of distance washers														
Left side cheek	inside	-	1	2	3	4	4	5	7	-	1	2	5	8	10	13
	outside	15	14	12	10	8	6	5	1	26	23	20	16	11	6	1
Right side cheek	inside	2	2	3	4	5	7	7	9	2	4	6	7	9	12	14
Weight without electric equipment	without/with travel drive	27,9/40,9								29,2/42,2						
Crossbar cpl.		839 564 44								839 565 44						
Trolley cpl.		840 114 44														

1) If loads close to the maximum load are frequently moved, we recommend that the next larger size trolley be used.
2) see also section 1.14

Example:
Ordering an EU 22 DK standard-headroom monorail hoist for flange width 90 mm
Travel speed approx. 14 m/min, 230/400 V, 50 Hz

1	Crossbar	part no.	839 563 44
1	Trolley	part no.	840 114 44
1	Travel drive	part no.	563 064 44

20352544.indd/180713

2.11.6 RUDK/EUDK drop stop arrangement

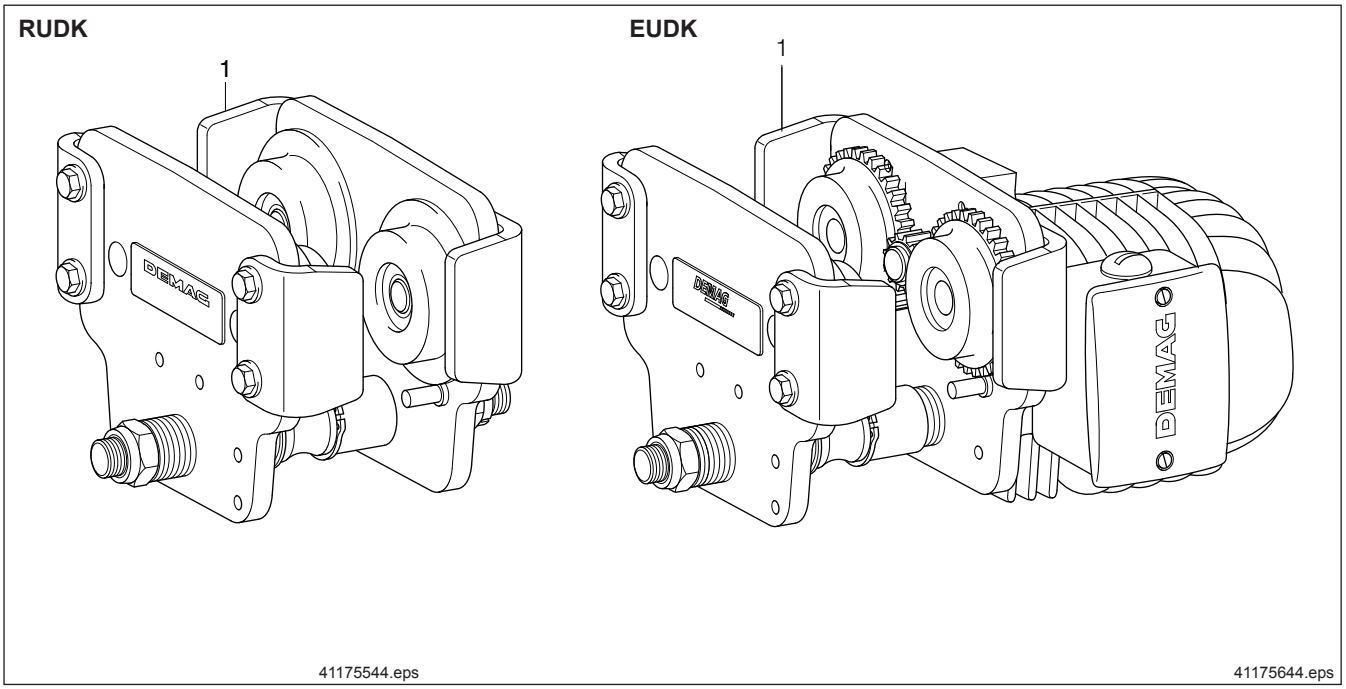

RU/EU 11 DK drop stop set	part no. 839 697 44
RU/EU 22 DK drop stop set	part no. 839 698 44

2.11.7 Supporting rollers

For EU 11 DK trolleys for flange widths 58 - 143 mm

Supporting roller complete part no. 839 130 44

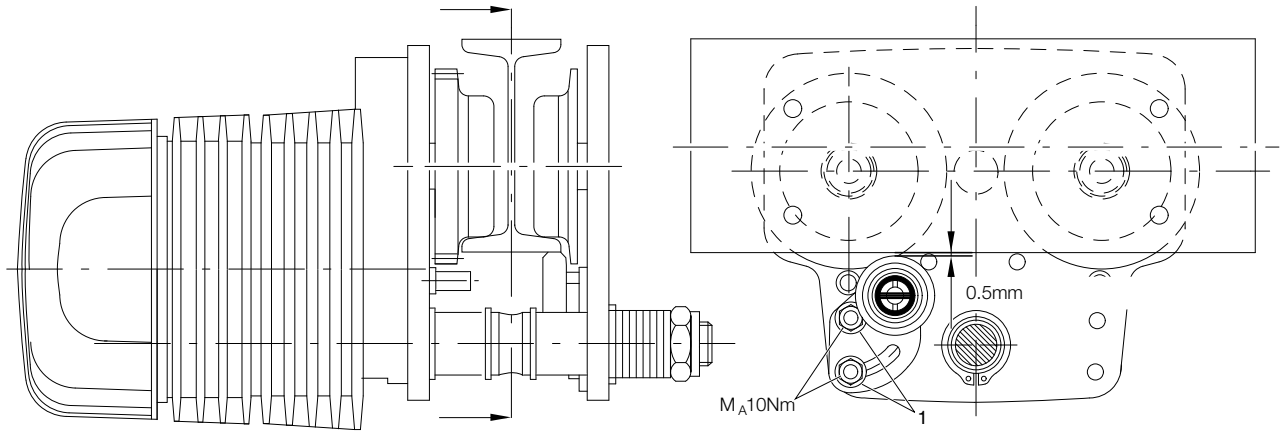

2.12 RU56 / EU56 trolley

Max. load capacity 5600 kg
for girders to DIN 1025, part 1 - 5

Suitable for Demag chain hoist:
DC-Pro 15 - 1000 to 3200 kg,
DC-Pro 16 - 1250 to 3200 kg,
DC-Pro 25 - 2000 to 5000 kg

For further information, please refer to the 'RU/EU56 trolley technical data', table page 17.

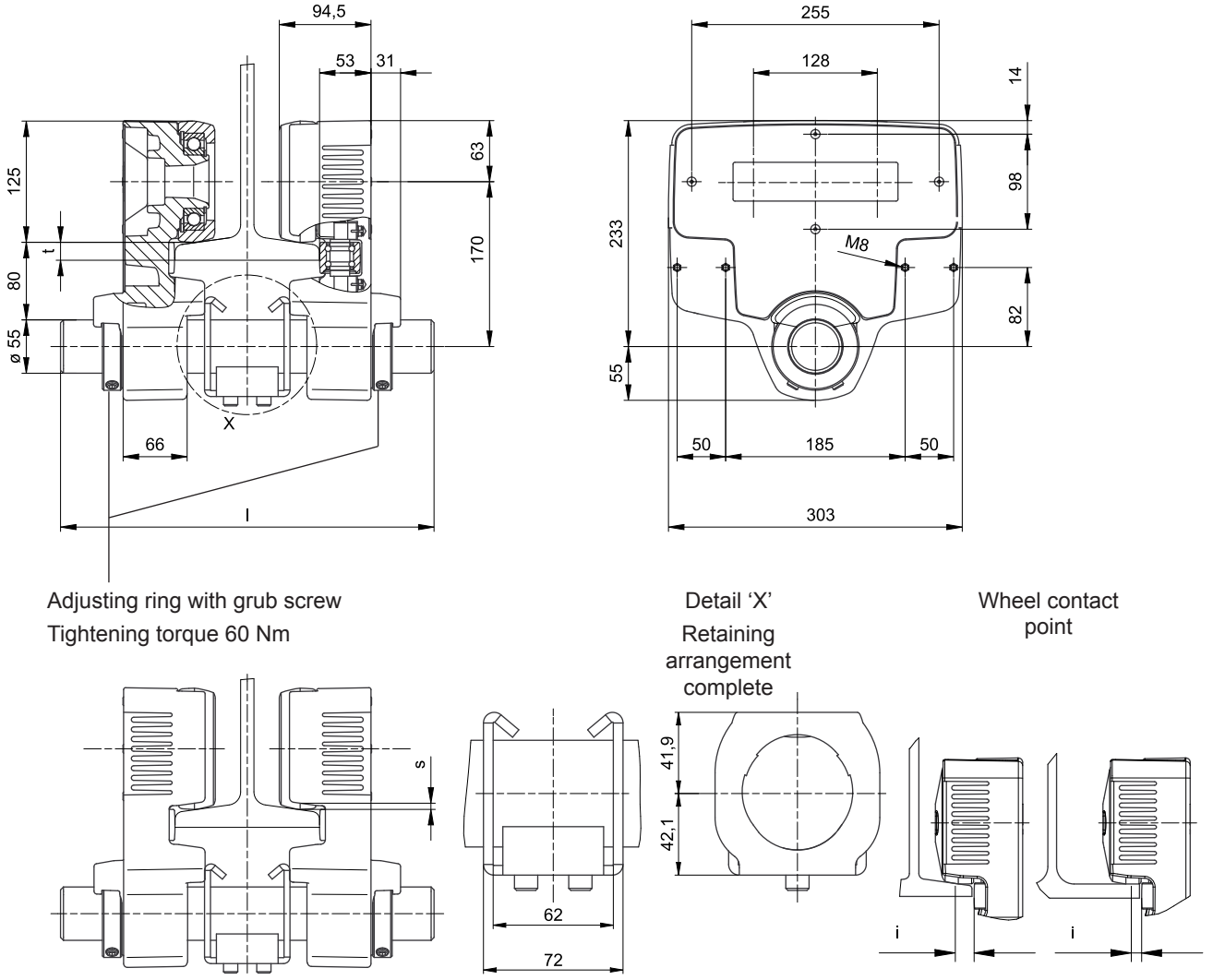

Pay attention to clearance dimension for girder connection by means of fish plates.
Travel wheel material: Spheroidal-graphite cast iron

Screws for fittings	Tightening torque	Thread depth	
		min.	max.
	[Nm]	[mm]	[mm]
M8	18	16	21

1) From flange width 106 mm

Designation	Load capacity	Part no.	Flange width	Max. flange thickness	Crossbar	Sloping flange		Parallel flange		Weight	Runway girder curve radii 1)	
				t	l	i	s	i	s		Push travel	Electric travel
	[kg]		[mm]	[mm]	[mm]	[mm]	[mm]	[mm]	[mm]	[kg]	R_{min} [mm]	R_{min} [mm]
RU56 - 200	5600	716 820 45	98 - 200	30	385	22,7	min. 3 bis 6	20	min. 2 bis 4	32,8	2000	2500
RU56 - 310		716 831 45	201 - 310		495					34,8		
RU56 - 500		On request	311 - 500		695					39,2		

DK chain hoist application with RU / EU56	DK 16	DK 20
at right angles to the girder	From flange width 140 mm with a long suspension eye and additional adjusting rings part no. 716 854 45	With long suspension eye and retaining arrangement, cpl.
parallel to the girder	-	From flange width 106 mm with a suspension ring and additional adjusting rings part no. 716 854 45

20352544.indd/180713

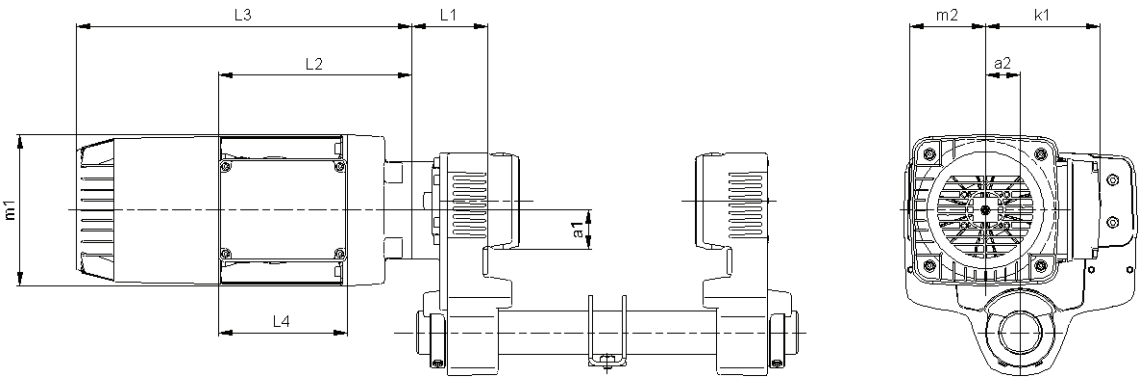

42734944.jpg

EU56 with motor	a1	a2	m1	m2	k1	L1	L2	L3	L4	Weight for flange width	
										≤ 200 mm	> 200 mm
	[mm]	[mm]	[mm]	[mm]	[mm]	[mm]	[mm]	[mm]	[mm]	[kg]	[kg]
ZBF 71	51	45	140	70	123	99	218	335	153	51,2	53,2
ZBF 80			157	79	132		231	391	153	58,2	60,2
ZBF 90			196	98	149		251	435	168	66,2	68,2

Designation	Flange width [mm]	Cross-travel speed [m/min]	Load capacity up to 4000 kg	Load capacity up to 5000 kg	Part no.	Weight [kg]
1 EU56 trolley cpl. without motor	98 - 200	12/4			716 842 45	38,2
		24/6				
		40/10			716 843 45	
	201 - 310	12/4			716 844 45	40,2
		24/6				
		40/10			716 845 45	
1 side cheek, driven (2 wheels)		12/4	ZBF 80 A 12/4		716 827 45	17,5
		24/6	ZBF 71 A 8/2			
		40/10	ZBF 80 A 8/2	ZBF 90 B 8/2	716 828 45	
1 side cheek, non-driven					716 824 45	12
1 RU / EU crossbar	98 - 200				716 851 45	8,8
	201 - 310				716 853 45	10,8
1 crossbar for DC 10	180 - 310				749 514 46	10,5

Example for ordering
EU56 cpl. up to flange width 310 mm
Consisting of:
1 EU56 trolley complete in accordance with speed and load capacity assignment
1 Travel motor with specification of voltage and type of enclosure

Supporting roller fitting
Supporting rollers need to be fitted to the EU56 trolleys for smaller flange widths in combination with the larger motors. Supporting rollers are required for EU56 trolleys in the following cases:
- with ZBF 80 motors up to flange width 130,
- with ZBF 90 motors up to flange width 200.

Drive control
For connecting an AC motor to the DC-Pro 16/25 chain hoist, a crab module (part no. 720 335 45) is required. The crab module and the Polu-box (DC 1-15) already include the brake control. For voltages > 500 V, the GF brake module is used and the motor is delivered with fitted star point.

EU56 gearbox
The gearbox is maintenance-free for up to 10 years. Changing the oil is not required.

IP55 sealing arrangement

Travel motors and brakes are provided with IP54 type of enclosure as standard. Travel drives can be ordered with IP55 as an option.
A sealing arrangement can be used to increase the enclosure of the brake to IP 55 to prevent harmful dust accumulation and hose water from inhibiting correct operation of the brake.
This is generally recommended for outdoor operation. The advantages of an open brake arrangement without any sealing are improved heat dissipation and removal of abrasion from inside the brake.

For further information, please refer to the 'ZNA, ZBA, ZBF motor operating instructions', table page 17.

Brake
Unlike for the standard design, the following must be considered for EU56 trolleys with ZBF motors:

Motor	Brake	Brake torque	Spring assignment
ZBF 71	B003	1,4 Nm	3 off blue
ZBF 80	B020	2,2 Nm	4 off blue
ZBF 90	B020	5,6 Nm	4 off red and 2 off blue

Contact the manufacturer for a reduced brake torque on ZBF 90 motors.

2.13 ZBF electric key values

Travel motor data (A short-term voltage tolerance of ± 10 % or a short-term frequency tolerance of ± 2 % is possible.)
Motors are designed in compliance with insulation class F.
The current values are calculated for an ambient temperature of 40 °C.

Motor size	No. of poles				220 V, 50 Hz, 3 ~ (CE)				230 V, 50 Hz, 3 ~ (CE)				240 V, 50 Hz, 3 ~ (CE)			
		CDF	P_N	n_N	I_N	I_A/I_N	cos φ_N	cos φ_A	I_N	I_A/I_N	cos φ_N	cos φ_A	I_N	I_A/I_N	cos φ_N	cos φ_A
		[%]	[kW]	[rpm]	[A]	[A]	[A]	[A]	[A]	[A]	[A]	[A]	[A]	[A]	[A]	[A]
ZBF 71 A 8/2	8	40	0,09	675	1,40	1,60	0,61	0,78	1,30	1,60	0,61	0,78	1,30	1,60	0,61	0,78
	2	40	0,34	2785	1,90	3,50	0,73	0,85	1,80	3,50	0,73	0,85	1,70	3,50	0,73	0,85
ZBF 80 A 8/2	8	40	0,13	630	2,60	1,20	0,64	0,90	2,50	1,20	0,64	0,90	2,40	1,20	0,64	0,90
	2	40	0,50	2790	2,60	4,50	0,73	0,90	2,50	4,50	0,73	0,90	2,40	4,50	0,73	0,90
ZBF 90 B 8/2	8	40	0,20	690	2,80	1,95	0,50	0,78	2,60	1,95	0,50	0,78	2,50	1,95	0,50	0,78
	2	40	0,80	2765	4,10	3,60	0,79	0,81	4,00	3,60	0,79	0,81	3,80	3,60	0,79	0,81
ZBF 80 A 12/4	12	15	0,06	415	2,60	1,00	0,71	0,79	2,50	1,00	0,71	0,79	2,40	1,00	0,71	0,79
	4	40	0,25	1380	1,80	2,80	0,64	0,88	1,70	2,80	0,64	0,88	1,60	2,80	0,64	0,88

Motor size	No. of poles				380-400 V, 50 Hz, 3 ~ (CE)				415 V, 50 Hz, 3 ~ (CE)				500 V, 50 Hz, 3 ~ (CE)			
		CDF	P_N	n_N	I_N	I_A/I_N	cos φ_N	cos φ_A	I_N	I_A/I_N	cos φ_N	cos φ_A	I_N	I_A/I_N	cos φ_N	cos φ_A
		[%]	[kW]	[rpm]	[A]	[A]	[A]	[A]	[A]	[A]	[A]	[A]	[A]	[A]	[A]	[A]
ZBF 71 A 8/2	8	40	0,09	675	0,76	1,60	0,61	0,78	0,73	1,60	0,61	0,78	0,61	1,60	0,61	0,78
	2	40	0,34	2785	1,00	3,50	0,73	0,85	1,00	3,50	0,73	0,85	0,84	3,50	0,73	0,85
ZBF 80 A 8/2	8	40	0,13	630	1,45	1,20	0,64	0,90	1,35	1,20	0,64	0,90	1,15	1,20	0,64	0,90
	2	40	0,50	2790	1,45	4,50	0,73	0,90	1,35	4,50	0,73	0,90	1,15	4,50	0,73	0,90
ZBF 90 B 8/2	8	40	0,20	690	1,50	1,95	0,50	0,78	1,45	1,95	0,50	0,78	1,20	1,95	0,50	0,78
	2	40	0,80	2765	2,30	3,60	0,79	0,81	2,20	3,60	0,79	0,81	1,80	3,60	0,79	0,81
ZBF 80 A 12/4	12	15	0,06	415	1,50	1,00	0,71	0,79	1,40	1,00	0,71	0,79	1,20	1,00	0,71	0,79
	4	40	0,25	1380	0,97	2,80	0,64	0,88	0,93	2,80	0,64	0,88	0,78	2,8	0,64	0,88

Motor size	No. of poles				525 V, 50 Hz, 3 ~ (CE)			
		CDF	P_N	n_N	I_N	I_A/I_N	cos φ_N	cos φ_A
		[%]	[kW]	[rpm]	[A]	[A]	[A]	[A]
ZBF 71 A 8/2	8	40	0,09	675	0,58	1,60	0,61	0,78
	2	40	0,34	2785	0,80	3,50	0,73	0,85
ZBF 80 A 8/2	8	40	0,13	630	1,10	1,20	0,64	0,90
	2	40	0,50	2790	1,10	4,50	0,73	0,90
ZBF 90 B 8/2	8	40	0,20	690	1,15	1,95	0,50	0,78
	2	40	0,80	2765	1,75	3,60	0,79	0,81
ZBF 80 A 12/4	12	15	0,06	415	1,10	1,00	0,71	0,79
	4	40	0,25	1380	0,74	2,80	0,64	0,88

Motor size	No. of poles				220 V, 60 Hz, 3 ~ (CE / $_C$CSA$_{US}$)				230 V, 60 Hz, 3 ~ (CE / $_C$CSA$_{US}$)				240 V, 60 Hz, 3 ~ (CE / $_C$CSA$_{US}$)			
		CDF	P_N	n_N	I_N	I_A/I_N	cos φ_N	cos φ_A	I_N	I_A/I_N	cos φ_N	cos φ_A	I_N	I_A/I_N	cos φ_N	cos φ_A
		[%]	[kW]	[rpm]	[A]	[A]	[A]	[A]	[A]	[A]	[A]	[A]	[A]	[A]	[A]	[A]
ZBF 71 A 8/2	8	40	0,11	825	1,70	1,60	0,60	0,77	1,60	1,60	0,60	0,77	1,50	1,60	0,60	0,77
	2	40	0,41	3385	2,30	3,50	0,72	0,84	2,20	3,50	0,72	0,84	2,10	3,50	0,72	0,84
ZBF 80 A 8/2	8	40	0,16	780	3,10	1,20	0,63	0,89	3,00	1,20	0,63	0,89	2,90	1,20	0,63	0,89
	2	40	0,60	3390	3,10	4,50	0,72	0,89	3,00	4,50	0,72	0,89	2,90	4,50	0,72	0,89
ZBF 90 B 8/2	8	40	0,24	840	3,30	1,95	0,49	0,77	3,20	1,95	0,49	0,77	3,00	1,95	0,49	0,77
	2	40	0,96	3365	5,00	3,60	0,78	0,80	4,80	3,60	0,78	0,80	4,60	3,60	0,78	0,80
ZBF 80 A 12/4	12	15	0,07	515	3,20	1,00	0,70	0,78	3,00	1,00	0,70	0,78	2,90	1,00	0,70	0,78
	4	40	0,30	1680	2,10	2,80	0,63	0,87	2,00	2,80	0,63	0,87	1,90	2,80	0,63	0,87

Motor size	No. of poles				380 V, 60 Hz, 3 ~ (CE)				400 V, 60 Hz, 3 ~ (CE)				440 V, 60 Hz, 3 ~ (CE / $_C$CSA$_{US}$)			
		CDF	P_N	n_N	I_N	I_A/I_N	cos φ_N	cos φ_A	I_N	I_A/I_N	cos φ_N	cos φ_A	I_N	I_A/I_N	cos φ_N	cos φ_A
		[%]	[kW]	[rpm]	[A]	[A]	[A]	[A]	[A]	[A]	[A]	[A]	[A]	[A]	[A]	[A]
ZBF 71 A 8/2	8	40	0,11	825	0,96	1,60	0,60	0,77	0,91	1,60	0,60	0,77	0,83	1,60	0,60	0,77
	2	40	0,41	3385	1,30	3,50	0,72	0,84	1,30	3,50	0,72	0,84	1,10	3,50	0,72	0,84
ZBF 80 A 8/2	8	40	0,16	780	1,80	1,20	0,63	0,89	1,70	1,20	0,63	0,89	1,55	1,20	0,63	0,89
	2	40	0,60	3390	1,80	4,50	0,72	0,89	1,70	4,50	0,72	0,89	1,55	4,50	0,72	0,89
ZBF 90 B 8/2	8	40	0,24	840	1,90	1,95	0,49	0,77	1,80	1,95	0,49	0,77	1,65	1,95	0,49	0,77
	2	40	0,96	3365	2,90	3,60	0,78	0,80	2,70	3,60	0,78	0,80	2,50	3,60	0,78	0,80
ZBF 80 A 12/4	12	15	0,07	515	1,80	1,00	0,70	0,78	1,70	1,00	0,70	0,78	1,60	1,00	0,70	0,78
	4	40	0,30	1680	1,20	2,80	0,63	0,87	1,20	2,80	0,63	0,87	1,10	2,80	0,63	0,87

Motor size	No. of poles				460 V, 60 Hz, 3 ~ (CE / $_C$CSA$_{US}$)				480 V, 60 Hz, 3 ~ (CE / $_C$CSA$_{US}$)				575 V, 60 Hz, 3 ~ (CE / $_C$CSA$_{US}$)			
		CDF	P_N	n_N	I_N	I_A/I_N	cos φ_N	cos φ_A	I_N	I_A/I_N	cos φ_N	cos φ_A	I_N	I_A/I_N	cos φ_N	cos φ_A
		[%]	[kW]	[rpm]	[A]	[A]	[A]	[A]	[A]	[A]	[A]	[A]	[A]	[A]	[A]	[A]
ZBF 71 A 8/2	8	40	0,11	825	0,79	1,60	0,60	0,77	0,76	1,60	0,60	0,77	0,63	1,60	0,60	0,77
	2	40	0,41	3385	1,10	3,50	0,72	0,84	1,00	3,50	0,72	0,84	0,87	3,50	0,72	0,84
ZBF 80 A 8/2	8	40	0,16	780	1,50	1,20	0,63	0,89	1,45	1,20	0,63	0,89	1,20	1,20	0,63	0,89
	2	40	0,60	3390	1,50	4,50	0,72	0,89	1,45	4,50	0,72	0,89	1,20	4,50	0,72	0,89
ZBF 90 B 8/2	8	40	0,24	840	1,60	1,95	0,49	0,77	1,50	1,95	0,49	0,77	1,25	1,95	0,49	0,77
	2	40	0,96	3365	2,40	3,60	0,78	0,80	2,30	3,60	0,78	0,80	1,90	3,60	0,78	0,80
ZBF 80 A 12/4	12	15	0,07	515	1,50	1,00	0,70	0,78	1,50	1,00	0,70	0,78	1,20	1,00	0,70	0,78
	4	40	0,30	1680	1,00	2,80	0,63	0,87	0,97	2,80	0,63	0,87	0,81	2,80	0,63	0,87

2.14 DRF 200 friction wheel travel drive with travel motor for profile-section girders

2.14.1 Use

DC chain hoists coupled to DRF 200 friction wheel travel drives can be used for the following applications: e.g. inclined travel, special speeds, frequency-regulated speeds but also poor track conditions, wet and dirty tracks.

Drive control

The Polu-box is needed to control the motors for DC-Pro 1 to 15 or the crab module for DC-Pro 16 to 25.

2.14.2 Runway

The use of I-beam and box girder sections with parallel flanges as tracks is possible.

Curve radii

Minimum medium horizontal curve radius				
Flange width b	[mm]	≥ 100	< 200	< 300
Curve radius $R_{hor\ min}$	[mm]	> 800	> 850	> 900
Minimum medium vertical curve radius (gradient radius)				
Flange thickness t	[mm]	10 - 19	20 - 25	28 - 30
Curve radius $R_{vert\ min}$	[mm]	> 2000	> 2500	> 3000

In the interest of good travel characteristics, we recommend the use of much larger curve radii.

- Wear of the travel wheels depends greatly on the curve radius. The forces required to move the load may strongly increase in the case of small curve radii in connection with high loads.
- The travel wheels and guide rollers may display increased wear in installations featuring intensive operation.

I-beam tracks should be bent with the utmost care to obtain a clean, regular curve. Ready-made curved sections are available for our special track.

For further information, please refer to the 'DRF 200 travel drive assembly instructions', table page 17.

2.14.3 Selection table

Load capacity [kg]	Possible travel speeds [m/min]	Travel drive	Brake	i_{tot}
ZBF motor, 2 travel speeds				
1500	10/40	ZBF 63 A8/2	B004	43,7
2000	8/31,5	ZBF 63 A8/2		55,1
2200	10/40	ZBF 71 A8/2		43,7
2500	6,3/25	ZBF 63 A8/2		68,9
	8/50	ZBF 80 A12/2	B020	34,6
	12,5/50	ZBF 80 A8/2		
2800	8/31,5	ZBF 71 A8/2	B004	55,1
3000	5/20	ZBF 63 A8/2		84,6
3400	6,3/25	ZBF 71 A8/2	B004	68,9
3500	6,3/40	ZBF 80 A12/2	B020	43,7
	10/40	ZBF 80 A8/2		
4000	4/25	ZBF 80 A12/2	B020	67
	6,3/25	ZBF 80 A8/2		
4200	5/20	ZBF 71 A8/2	B004	84,6
4500	5/31,5	ZBF 80 A12/2	B020	54,6
	8/31,5	ZBF 80 A8/2		
KBF motor, 2 travel speeds				
1750	8/31,5	KBF 71 A 8/2	-	56
1990	10/40	KBF 71 B 8/2		44,4
2200	6,3/25	KBF 71 A 8/2		68,8
2530	8/31,5	KBF 71 B 8/2		56
2710	5/20	KBF 71 A 8/2		85,9
3180	6,3/25	KBF 71 B 8/2		68,8
3930	5/20	KBF 71 B 8/2		85,9

2.14.4 Electric key values

Size	P_N [kW]	n_N [rpm]	I_N for 50 Hz, 3 ~ 230 V [A]	400 V [A]	500 V [A]	I_A/I_N	$\cos \varphi_N$	M_N [Nm]	M_A/M_N	M_H [Nm]	J_{mot} [kgm²]	A [1/h]	M_{BStd} [Nm]	Weight [kg]
ZBF motor														
ZBF 63 A 8/2 B004	0,06	675	1,20	0,66	0,53	1,40	0,59	0,85	2,20	1,70	0,00461	720	1,3	12,5
	0,25	2745	1,70	0,95	0,76	2,65	0,71	0,87	2,10	1,50		550		
ZBF 71 A 8/2 B004	0,09	675	1,40	0,76	0,61	1,60	0,61	1,25	2,70	2,50	0,00692	620	1,8	13
	0,34	2785	1,80	1,00	0,80	3,50	0,73	1,15	2,60			500		
ZBF 80 A 8/2 B020	0,13	630	2,10	1,20	0,96	1,25	0,64	1,95	2,10	3,50	0,01275	620	3,3	19,5
	0,50	2790	2,50	1,40	1,10	4,50	0,73	1,70	2,60	4,00		500		
ZBF 80 A 12/2 B020	0,06	415	2,70	1,50	1,20	1,00	0,71	1,40	2,40	3,00		620		
	0,50	2790	2,50	1,40	1,20	4,50	0,73	1,70	2,60	4,00		500		
KBF motor														
KBF 71 A 8/2	0,04	640	On request	0,76	On request	1,25	0,71	0,60	3,20	1,70	3,8	1400	1,1	9,6
	0,20	2650		0,62		3,55	0,80	0,72	2,50	1,50		600		
KBF 71 B 8/2	0,06	660		1,20		1,15	0,55	0,87	4,40	2,50	3,9	1250	1,6	11,0
	0,30	2750		1,10		3,55	0,70	1,05	3,10	2,70		500		

2.14.5 Dimensions

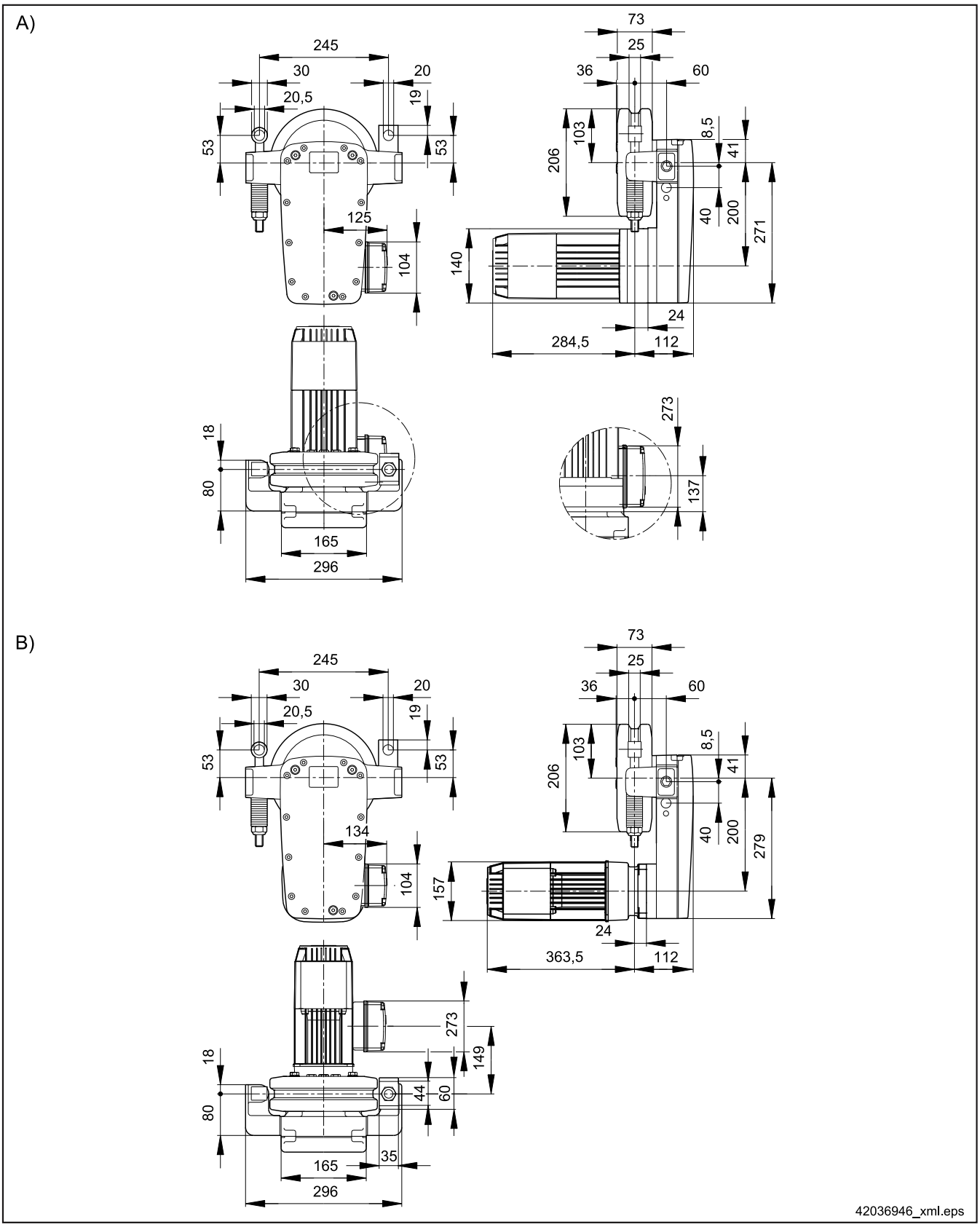

Item	Designation	Item	Designation
A)	DRF 200 with ZBF 63 / 71 motor	B)	DRF 200 with ZBF 80 motor

2.14.6 Trolley for DRF 200 for profile-section girders

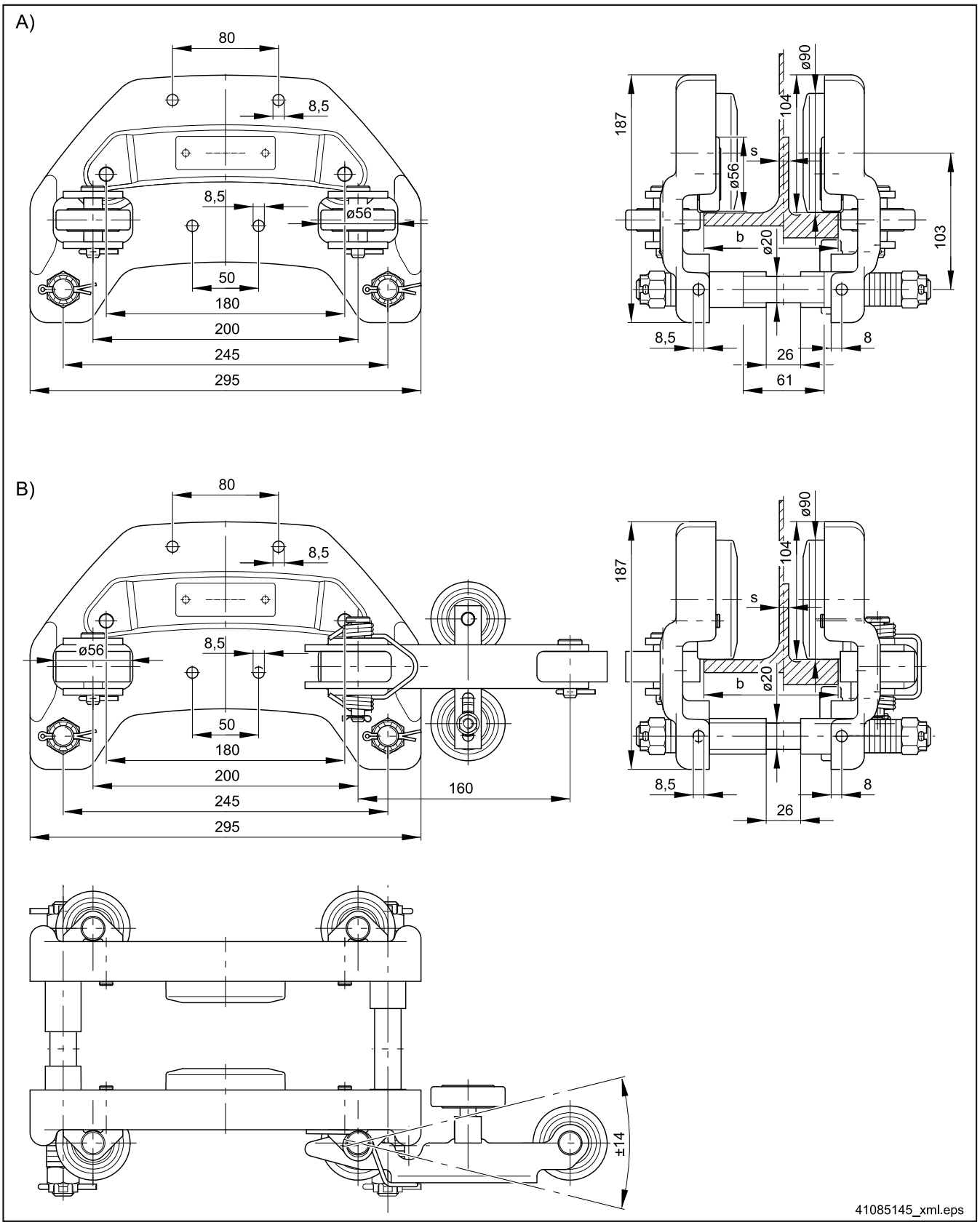

Item	Designation	Item	Designation
A)	Trolley for straight travel as tractor trolley	B)	Trolley with curve travel guide arm as tractor trolley

2.15 Hook dimension C with trolleys

DC-Pro 1-5 chain hoist
with CF 5 trolley

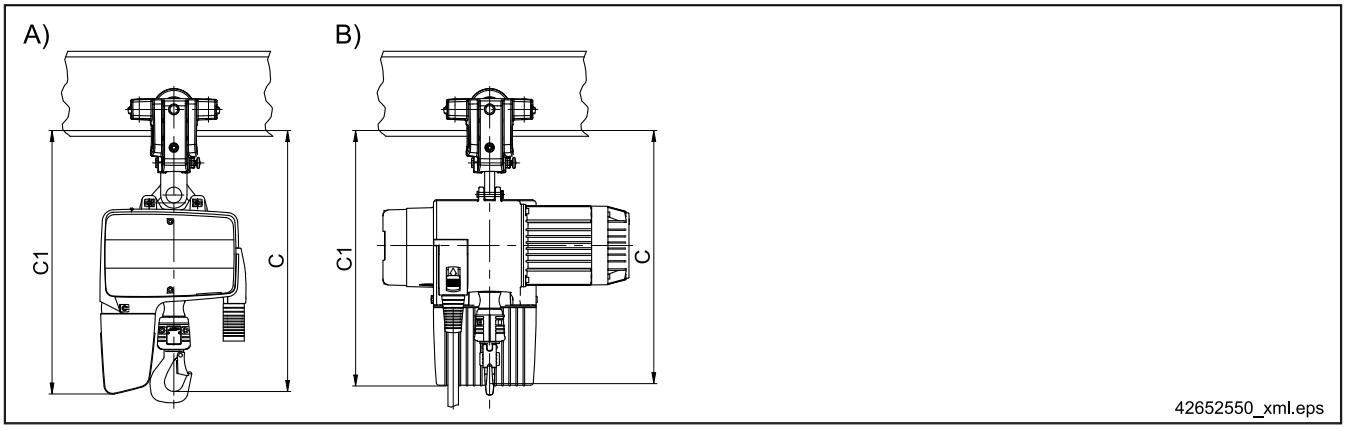

Chain hoist size	Reeving	Trolley	(A) Trolley at right angles to the girder			(B) Trolley parallel to the girder		
			C [1]	C1 for hook path		C [1]	C1 for hook path	
				H5	H8		H5	H8
DC-Pro 1/2	1/1	CF 5	406	415	445	401	410	440
DC-Pro 5			458	477	507	453	472	502

1) Dimension C is increased by 42 mm for chain hoists with v=16/4 or v=12/3.
Dimension C is increased by 111 mm for DC 5 chain hoists with v=24/6.
Dimension C is increased by 131 mm for DC 10 chain hoists with v=24/6.

DC-Pro 1-25 chain hoist
with U11 - U34, RU56 trolleys

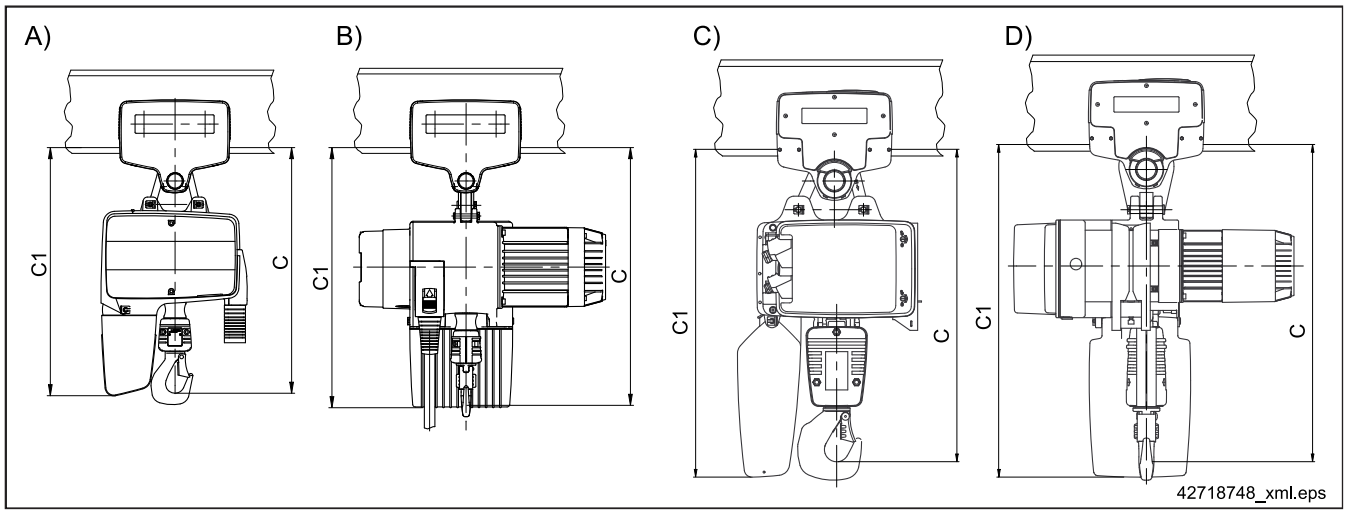

Chain hoist size [1]	Reeving	Motor size	Trolley	(A), (C) Trolley at right angles to the girder						(B), (D) Trolley parallel to the girder					
				C [2]	C1 with chain collector size (hook path)					C [2]	C1 with chain collector size (hook path)				
					H5	H8	S	1	2		H5	H8	S	1	2
DC-Pro 1/2	1/1	ZNK 71 …	U11	416	425	455	-	-	-	410	419	449	-	-	-
DC-Pro 5		ZNK 80 …	U11	468	487	517				462	481	511			
DC-Pro 10		ZNK 100 A 8/2	U11	557	578	667				581	602	691			
			U22	569	590	679				593	614	703			
		ZNK 100 B 8/2	U11	557	667	667				581	691	691			
			U22	569	679	679				593	703	703			
	2/1	ZNK 100 B 8/2	U22 / U34	661	679	729				685	703	753			
DC-Pro 15	1/1	ZNK 100 B 8/2	U22 / U34	662	-	-	727 (H9)	847 (H16)	927 (H26)	694	-	-	759 (H9)	879 (H16)	959 (H26)
			RU56	678			743 (H9)	863 (H16)	943 (H26)	710			775 (H9)	895 (H16)	975 (H26)
	2/1		U22 / U34	772			727 (H4)	847 (H8)	927 (H13)	804			759 (H4)	879 (H8)	959 (H13)
			RU56	788			743 (H4)	863 (H8)	943 (H13)	820			775 (H4)	895 (H8)	975 (H13)
DC-Pro 16	1/1	ZNK 100 …	U22	704			-	877 (H16)	957 (H26)	736			-	909 (H16)	989 (H26)
	2/1		U34	799				877 (H8)	957 (H13)	831				909 (H8)	989 (H13)
DC-Pro 25	1/1	ZNK 100 …		704				877 (H10)	957 (H18)	736				909 (H10)	989 (H18)
	2/1		RU56	850				893 (H5)	973 (H9)	882				925 (H5)	1005 (H9)

1) Dimensions C and C1 decrease when the short suspension bracket is used:
for DC-Pro 1-5 units by 38 mm,
for DC-Pro 10 units by 33 mm.

2) Dimension C is increased by 42 mm for chain hoists with v=16/4 or v=12/3.
Dimension C is increased by 111 mm for DC 5 chain hoists with v=24/6.
Dimension C is increased by 131 mm for DC 10 chain hoists with v=24/6.

3 Models of the chain hoist

3.1 KDC / KLDC low-headroom monorail hoist

3.1.1 Use

The particularly compact, short KDC monorail hoist with extremely low headroom enables optimum utilisation of the hook path for low room heights.

3.1.2 Properties

KDC and KLDC chain hoists are based on DC-Pro / DCS-Pro chain hoists with the following features:

- All KDC / KLDC are fitted with operating limit switches for the highest and lowest hook positions.
- Owing to the two additional chain return arrangements, the FEM classification of the mechanisms and of the chain are reduced by one group in each case.
- The FEM data in the selection tables refer to the mechanism. In individual cases, the FEM classification may differ for the chain drive.
- Owing to the additional chain return arrangements, increased chain vibrations may occur caused by the polygon effect, in particular at higher hoist speeds. Versions with V24/6 m/min are therefore not available.
- Due to the additional chain return arrangements special chains are not available.
- Longer hook paths are only possible for the specified ranges with flexible collector bag without counterweight or rolling beam with supporting roller.
- Fitting of suspension ring, suspension hook or ZMS is not possible.
- The crab frame is electro-coated in black (cathodic dip coating), small parts are galvanised. Special paint finish is not possible for the crab frame.
- Travelling on curved tracks is only possible with KBK or RKDDC / EKDDC.
- The maximum flange width of the trolleys is 310 mm.
- Fitting of supporting rollers is not possible. Trolley buffers are not required, since the crab frame is buffered.
- The E11 - E34 travel drive is always equipped with a VG dual-output gearbox for two-wheel drive.
- The travel drive of a driven EKDC low-headroom monorail hoist is always fitted to the load trolley.
- Flange widths of the trolleys:
  - KDC 5: 58-310 mm;
  - KDC 10 ≤ 1000kg: 58-310 mm;
  - KDC 10 > 1000kg: 74-310 mm;
- Max. flange thickness:
  - KDC 5 with U11 + RU3/2 trolleys = 22 mm;
  - KDC 10 with U11 trolleys = 16 mm;
  - KDC 10 with U22 trolleys = 30 mm.

For further information, please refer to the 'KDC chain hoist assembly instructions', table page 17.

3.1.3 Selection table

KDC / KLDC low-headroom monorail hoist in DC-Pro, DC-ProDC (2 hoist speeds)

Load capacity [kg]	Chain hoist size	Reeving	Group of mechanisms DIN EN 14492 FEM / ISO	Chain size [mm]	Hoist speed at 50 Hz [m/min]	Hoist speed at 60 Hz [m/min]	Standard hook path 1) H [m]	Motor size 2)	Max. weight for hook path 3) 5 m [kg]	Max. weight for hook path 3) 8 m [kg]
160	5	1/1	3m / M6	5,3x15,2	16,0/4,0	19,2/4,8	5 and 8	ZNK 80 B 8/2	40	42
200										
250										
315					8,0/2,0	9,6/2,4				
	10			7,4x21,2	12,0/3,0	14,4/3,6		ZNK 100 A 8/2	75	79
400	5		2m / M5	5,3x15,2	8,0/2,0	9,6/2,4		ZNK 80 B 8/2	40	42
	10		3m / M6	7,4x21,2	12,0/3,0	14,4/3,6		ZNK 100 A 8/2	75	79
500	5		1Am / M4	5,3x15,2	8,0/2,0	9,6/2,4		ZNK 80 B 8/2	40	42
	10		3m / M6	7,4x21,2	12,0/3,0	14,4/3,6		ZNK 100 A 8/2	75	79
630	5	2/1		5,3x15,2	4,0/1,0	4,8/1,2		ZNK 80 B 8/2	45	49
	10	1/1		7,4x21,2	6,0/1,5	7,2/1,8		ZNK 100 A 8/2	75	79
					12,0/3,0	14,4/3,6		ZNK 100 B 8/2	83	87
800	5	2/1	2m / M5	5,3x15,2	4,0/1,0	4,8/1,2		ZNK 80 B 8/2	45	49
	10	1/1		7,4x21,2	6,0/1,5	7,2/1,8		ZNK 100 A 8/2	75	79
					12,0/3,0	14,4/3,6		ZNK 100 B 8/2	83	87
1000	5	2/1	1Am / M4	5,3x15,2	4,0/1,0	4,8/1,2		ZNK 80 B 8/2	45	49
	10	1/1		7,4x21,2	6,0/1,5	7,2/1,8		ZNK 100 A 8/2	75	79
					12,0/3,0	14,4/3,6		ZNK 100 B 8/2	83	91
1250		2/1	3m / M6		6,0/1,5	7,2/1,8				
1600			2m / M5							
2000			1Am / M4							

KDC / KLDC low-headroom monorail hoist in DCS-Pro, DC-ProFC (infinitely variable hoist speeds)

Load capacity [kg]	Chain hoist size	Reeving	Group of mechanisms DIN EN 14492 FEM / ISO	Chain size [mm]	Hoist speed 4) 5) at 50/60 Hz vs_{rated} [m/min]	Hoist speed 4) 5) at 50/60 Hz vs_{max} [m/min]	Standard hook path 1) H [m]	Motor size 2)	Max. weight for hook path 3) 5 m [kg]	Max. weight for hook path 3) 8 m [kg]
315	5	1/1	3m / M6	5,3x15,2	0,08-8	15	5 and 8	ZNK 80 A 4	41	43
	10			7,4x21,2	0,11-12	22		ZNK 100 A 4		
400	5		2m / M5	5,3x15,2	0,08-8	15		ZNK 80 A 4		
	10		3m / M6	7,4x21,2	0,11-12	22		ZNK 100 A 4		
500	5		1Am / M4	5,3x15,2	0,08-8	15		ZNK 80 A 4		
	10		3m / M6	7,4x21,2	0,11-12	22		ZNK 100 A 4		
630	5	2/1		5,3x15,2	0,04-4	7		ZNK 80 A 4	46	48
	10	1/1		7,4x21,2	0,06-6	11		ZNK 100 A 4	81	85
					0,11-12	22			89	93
800	5	2/1	2m / M5	5,3x15,2	0,04-4	7		ZNK 80 A 4	46	48
	10	1/1		7,4x21,2	0,06-6	11		ZNK 100 A 4	81	85
					0,11-12	22			89	93
1000	5	2/1	1Am / M4	5,3x15,2	0,04-4	7		ZNK 80 A 4	46	48
	10	1/1		7,4x21,2	0,06-6	11		ZNK 100 A 4	81	85
					0,11-12	22			89	93
1250		2/1	3m / M6		0,06-6	11			95	99
1600			2m / M5							
2000			1Am / M4							

1) Larger hook paths on request.
2) See Electric key data page for key motor data.
3) Weight of chain hoist with crab frame.
4) vs_{min} corresponds to a control ratio vs_{min} : vs_{max} of 1 : 200 (factory setting 1 : 100). vs_{max}, vs_{rated}, vs_{min}, acceleration time and deceleration time can also be changed by setting parameters with the control unit (see 'DCS-Pro chain hoist operating instructions'). Max. hoist speed in the partial load range / without load.
5) For DC-ProFC only nominal hoist speed vs_{rated} applies.

3.1.4 Dimensions

3.1.4.1 KDC 5

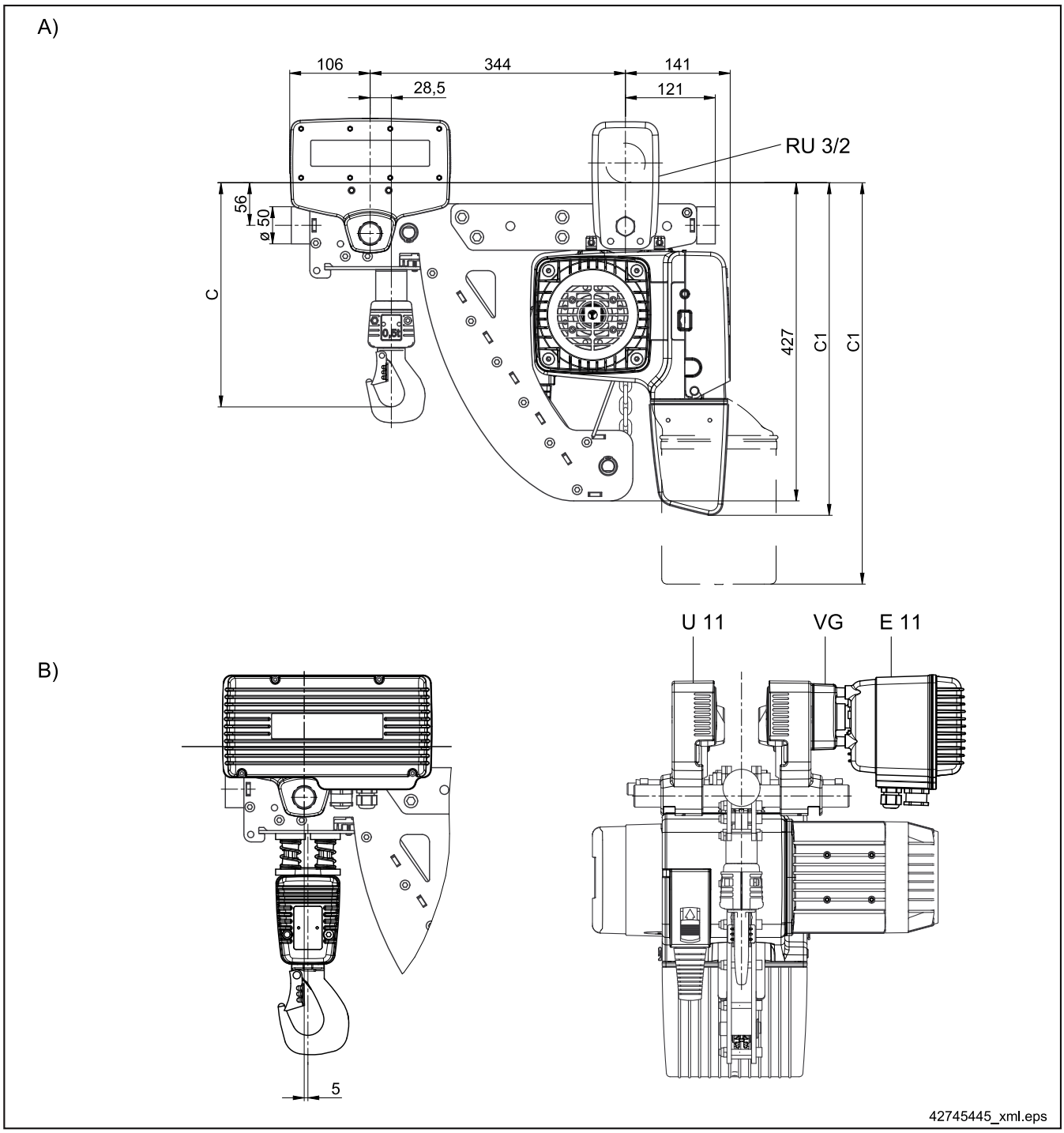

Chain hoist size	Reeving	Item	C [mm]	C1 [mm]		
				H5	H8	H25
KDC 5	1/1	A	300	446	476	540
	2/1	B	386	540	540	-

3.1.4.2 KDC 10

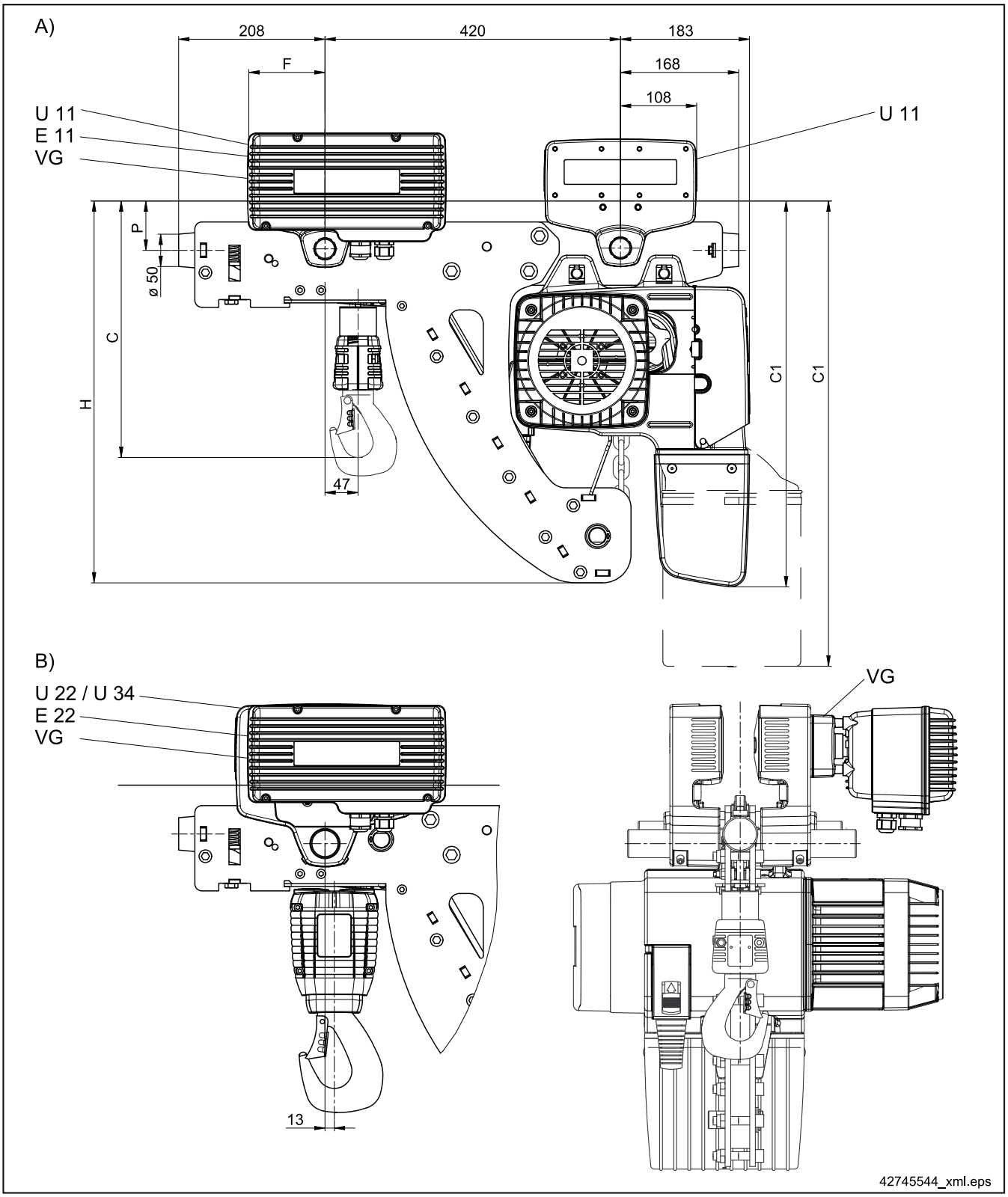

Chain hoist size	Reeving	Item	Trolley	C [mm]	C1 [mm]			F [mm]	H [mm]	P [mm]
					H5	H8	H20			
KDC 10	1/1	A	U11	353	539	628	614	110	533	60
	2/1	B	U22 / U34	432	638	624	-	128	543	70

3.1.4.3 KLDC with extended hook distance (for big-bag applications)

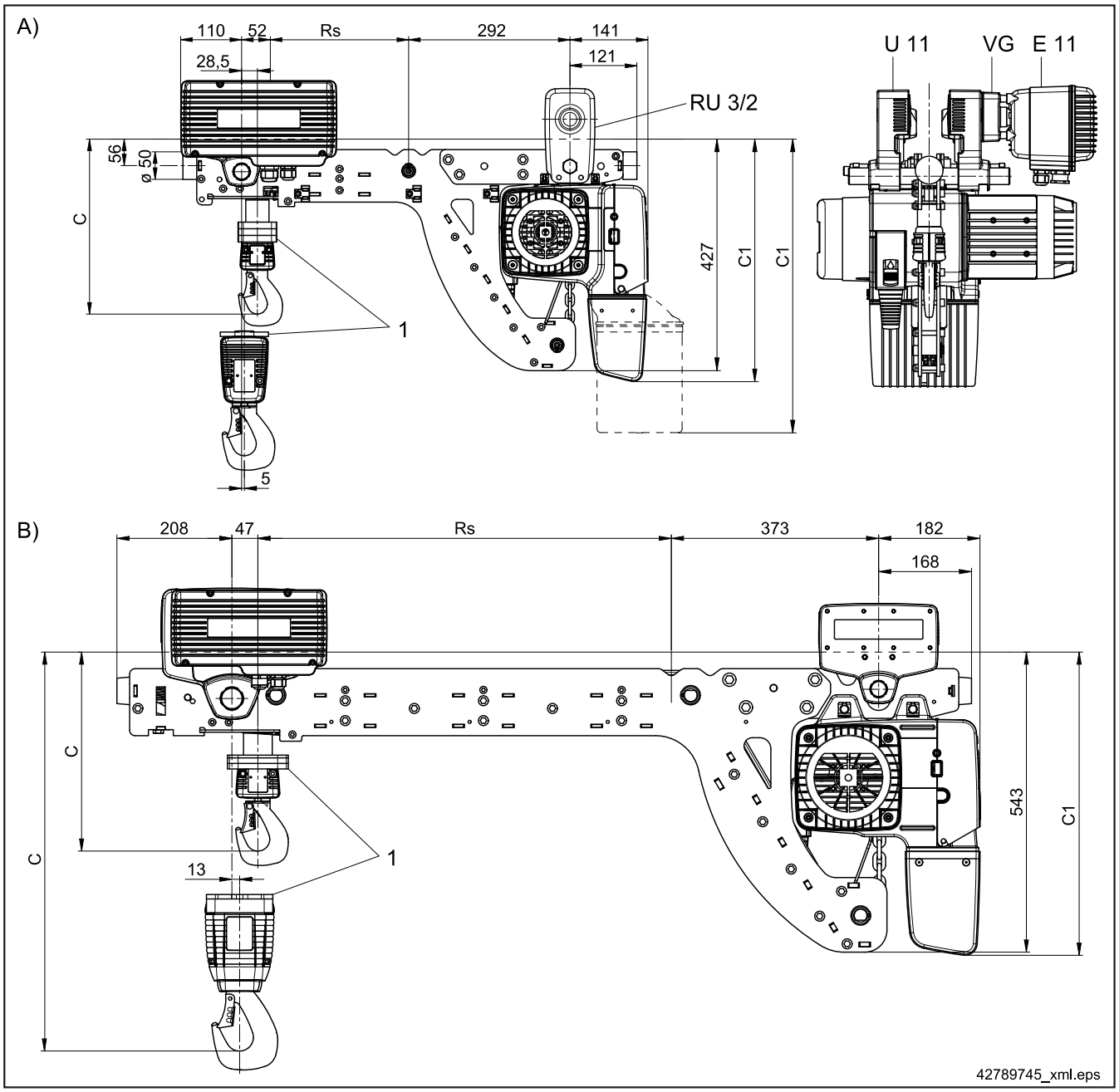

Chain hoist size	Reeving	Trolley	C [mm]	C1 [mm]			Total length with grid pitch Rs [mm]					
				H5	H8	H20	250	500	750	1000	1250	1500
KLDC 5 (item A)	1/1	U11 + RU 3/2	324	446	476	540	845	1095	1345	1595	1845	2095
	2/1		412	540	540	-						
KLDC 10 (item B)	1/1	U11	368	539	628	614	1060	1310	1560	1810	2060	2310
	2/1	U22 / U34	440	638	624	-						

Use

The KLDC low-headroom monorail hoist with extended hook distance is used e.g. for handling big-bags with a wide spreader.

Properties

The low-headroom monorail hoist can be extended at grid pitches of 250 mm up to max. 1500 mm, which corresponds to the distance between the two upper return sprockets.

The additional weight (1) increases the mass of the unloaded hook assembly / bottom block. This prevents blocking of the chain during lowering.

3.1.4.4 EKDC-ProDC 5 with direct control

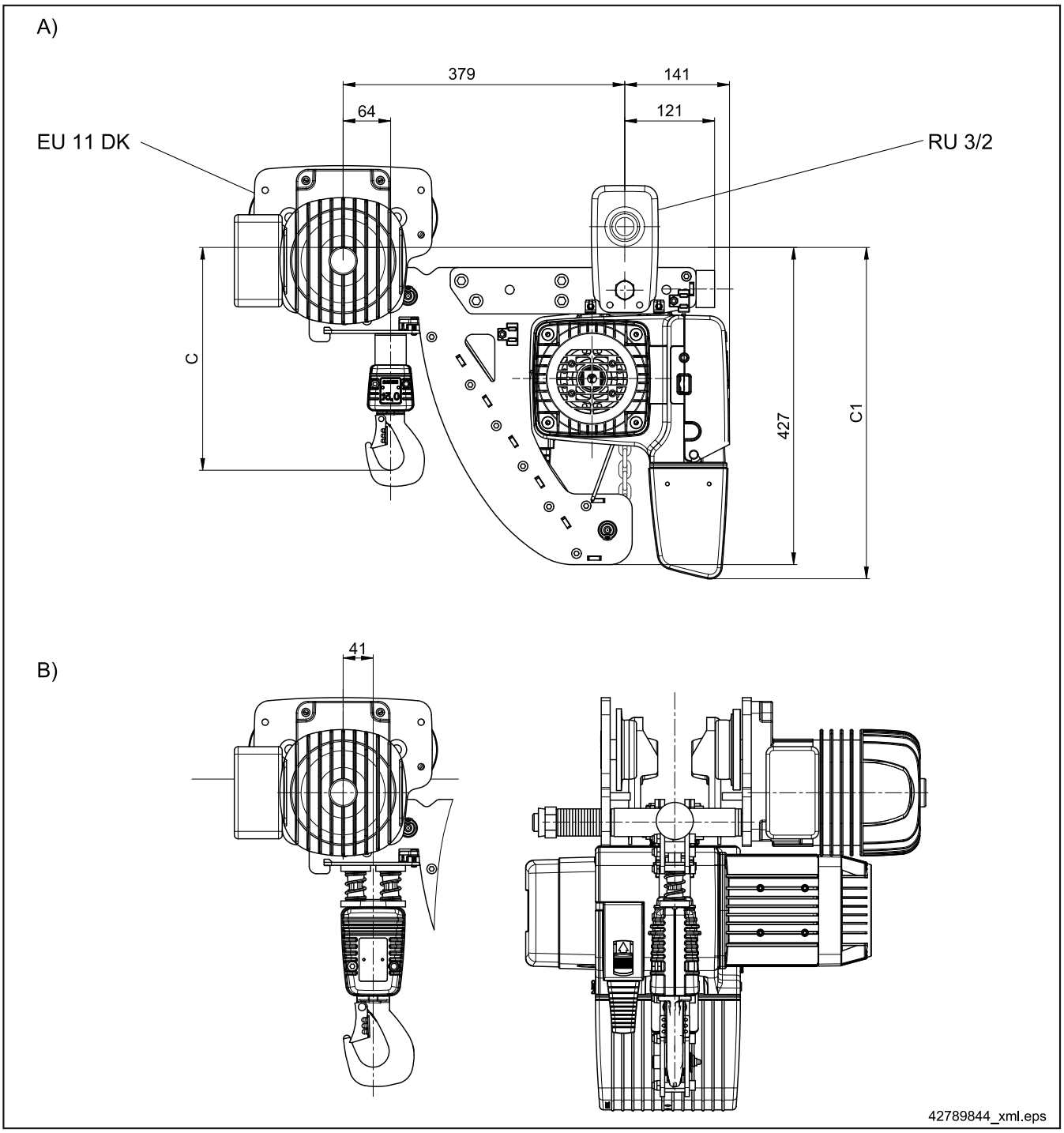

Chain hoist size	Reeving	Item	C [mm]	C1 [mm]		
				H5	H8	H25
EKDC-ProDC 5	1/1	A	300	446	476	540
	2/1	B	386	540	540	-

Also possible with EU11 DC and three-phase AC ZBF motor, see also section ‘EU11 - EU34 trolleys with three-phase AC ZBF motors’.

3.1.4.5 EKDC-ProDC 10 with direct control

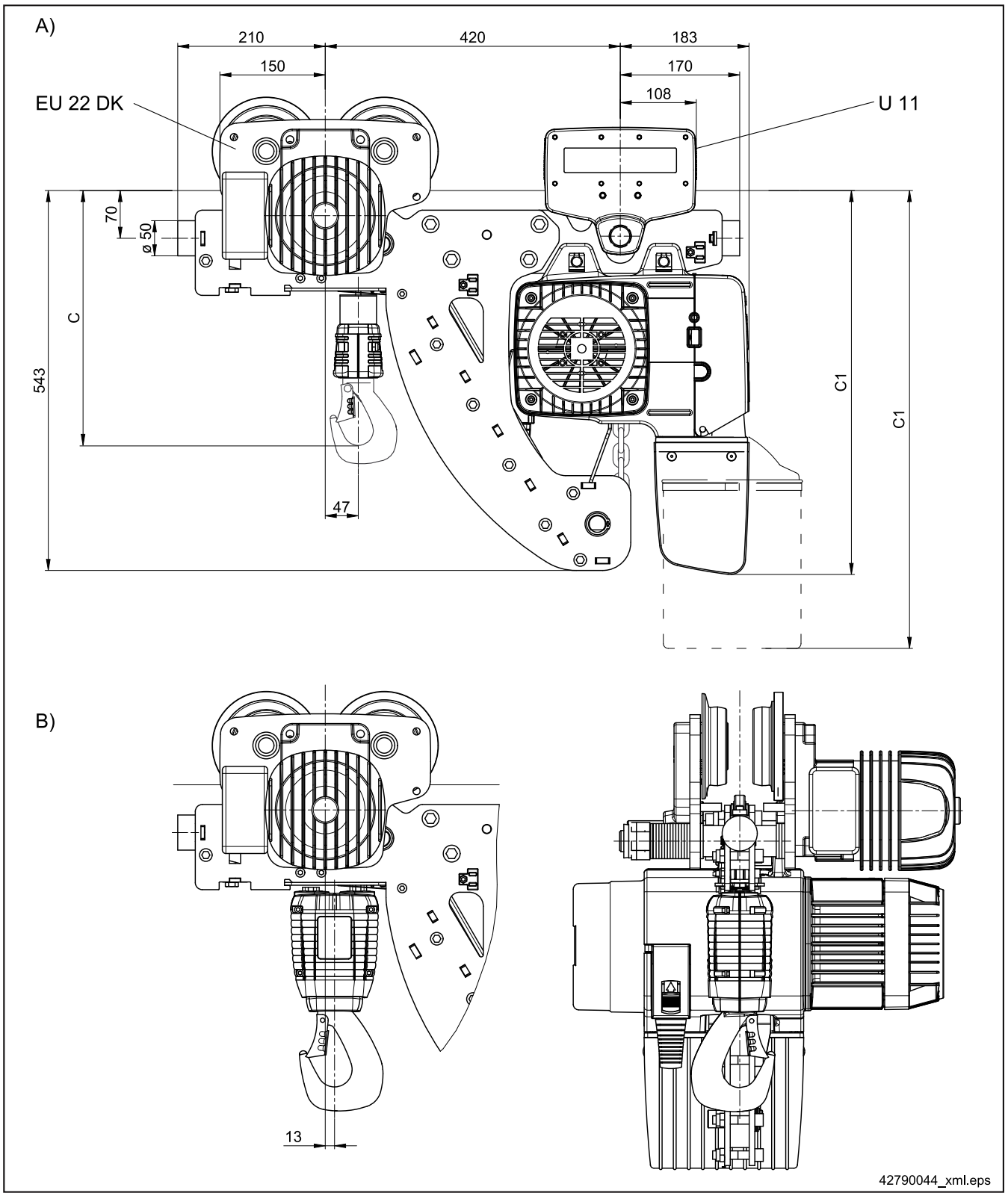

Chain hoist size	Reeving	Item	C [mm]	C1 [mm]		
				H5	H8	H20
EKDC-ProDC 10	1/1	A	363	549	638	624
	2/1	B	432	638	624	-

Also possible with EU11 DC and three-phase AC ZBF motor, see also section ‘EU11 - EU34 trolleys with three-phase AC ZBF motors’.

3.1.4.6 KDC with KBK II

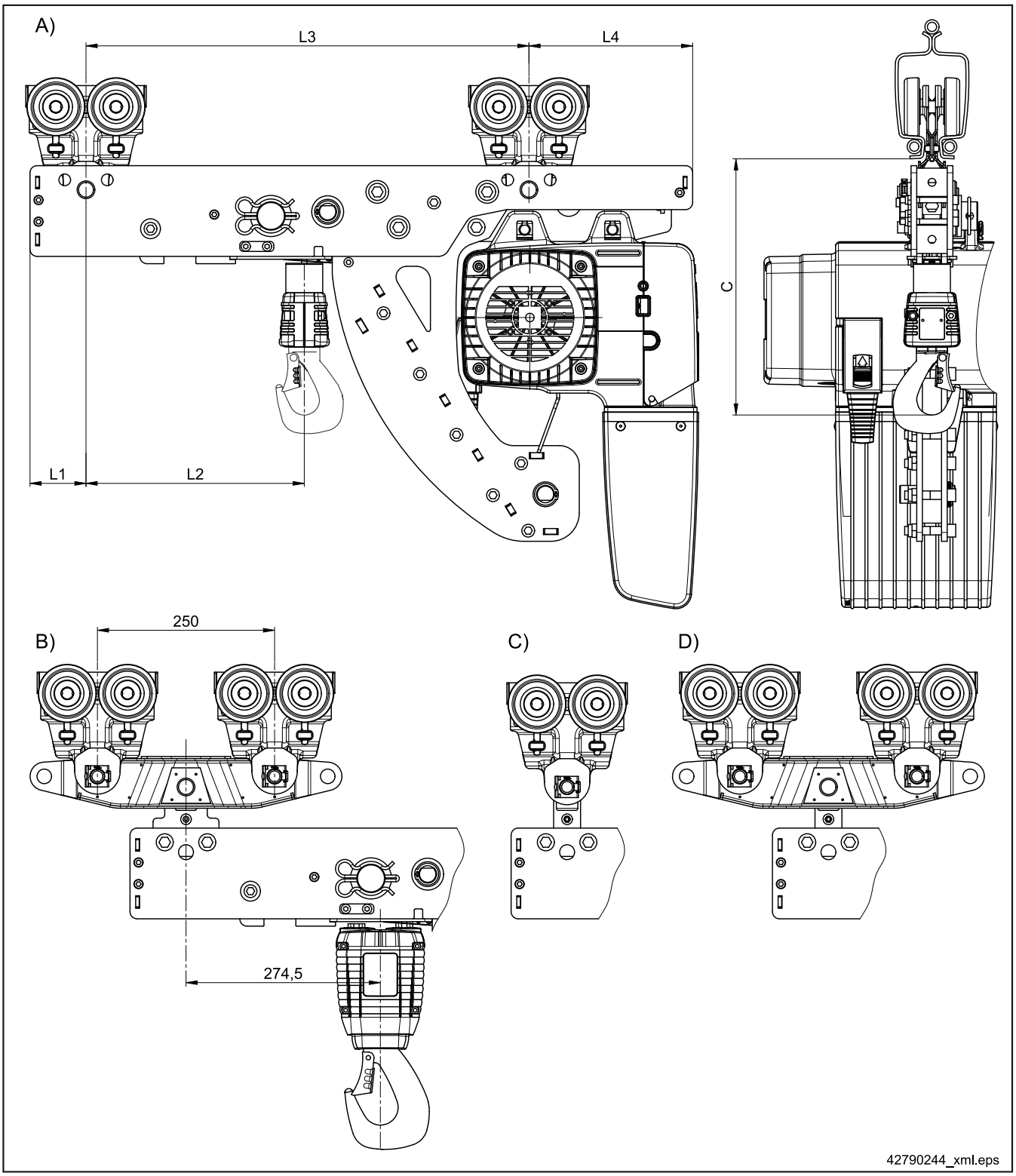

Item	Designation
A)	Short design with single trolley Not for driven trolleys
-	Straight travel with single trolley
B)	Straight travel with articulated frame
C)	Curve travel with single trolley
D)	Curve travel with articulated frame

Load capacity [kg]	Chain hoist size	Reeving	C dimension from lower edge of KBK section A) [mm]	B) [mm]	B) [mm]	C) [mm]	D) [mm]	L1 [mm]	L2 [mm]	L3 [mm]	L4 [mm]
≤ 500	KDC5	1/1	285	366	-	366	-	73	369	684	104
≤ 1000		2/1	in preparation								
	KDC10	1/1	361	453	-	453	-	79	308	625	231
≤ 2000		2/1	-	-	536	-	536				

3.1.5 Assignment of trolleys and travel drives

U11 - U34 and E11 - E34

Load capacity [kg]	Chain hoist size KDC		Flange width [mm]	Max. flange thickness [1] [mm]	Load trolley [2]	Auxiliary trolley [2]	Travel drive	Dual-output gearbox
≤ 1000	5	non-driven	58 - 200	22	U11 - 200	RU3/2	-	-
			201 - 310		U11 - 310		-	-
		driven	58 - 200		U11 - 200		E11	VG 11 - 34
			201 - 310		U11 - 310			
≤ 1000	10	non-driven	58 - 200	16	U11 - 200	U11 - 200	-	-
			201 - 310		U11 - 310	U11 - 310	-	-
		driven	58 - 200		U11 - 200	U11 - 200	E11	VG 11 - 34
			201 - 310		U11 - 310	U11 - 310		
≤ 2000		non-driven	74 - 200	22	U22 - 200	U11 - 200	-	-
			201 - 310		U34 - 310	U11 - 310	-	-
		driven	74 - 200		U22 - 200	U11 - 200	E22	VG 11 - 34
			201 - 310		U34 - 310	U11 - 310	E34	

RU / EU 11 DK and RU / EU 22 DK

Load capacity [kg]	Chain hoist size KDC-ProDC		Flange width [mm]	Max. flange thickness [mm]	Load trolley	Auxiliary trolley	Travel drive
≤ 1000	5	non-driven	78 - 300	16 [3]	RU 11 DK	RU 3/2	-
		driven			EU 11 DK		13/* PKF
≤ 2000	10	non-driven	82 - 300	22 [4]	RU 22 DK	RU11	-
		driven			EU 22 DK		13/* PKF

1) Optional trolley-drive combination EU / RU22 or EU / RU34 as load trolley and RU22 or RU34 as auxiliary trolley for a flange thickness up to 30 mm.
2) U11 trolley with steel travel rollers on request
3) 27 mm without anti-run-off device
4) 28 mm without anti-run-off device

3.2 LDC-D / KLDC-D double chain hoist

3.2.1 Use

The double chain hoist with two mechanically synchronised chain lead-offs is particularly suitable for handling long materials or for spreader operation. Chain hoist models LDC-D or KLDC-D are available. Two separate chain hoists with tandem control (but not with synchronous control) can also be used as an alternative for an application with two chain lead-offs.

3.2.2 Properties

Owing to their design, the two double chain hoists feature different product characteristics:

- Possible variants: stationary, travelling, for operation with KBK and for articulated trolleys.
- Asymmetric load distribution is permitted:
  - Distribution of the load must not exceed 1/3 to 2/3.
  - The load may only be distributed equally on KBK trolleys.
- EU trolley with VG dual-output gearbox on the chain hoist.

LDC-D double chain hoist:

- The chain hoist drives a separate hoist block with its own chain drive via a connected shaft. Both chain lead-offs are rigidly connected to each other by a common frame.
- Hook centre distances from 550 mm to 3200 mm.
- For hook centre distances > 2 m, the frame is reinforced by means of square tubes.
- C-dimension similar to that of the normal DC chain hoist.
- Suitable for higher speeds.
- Longer chain service life thanks to reduced polygon effect since there are no additional chain return sprockets.

LDC-D 5								
Hook centre distance	[mm]	500 - 860	861 - 1210	1211 - 1560	1561 - 1910	1911 - 2260	2261 - 2610	2611 - 3200
Crab frame tube length	[mm]	1050	1400	1750	2100	2450	2800	adapted
LDC-D 10								
Hook centre distance	[mm]	550 - 800	801 - 1150	1151 - 1500	1501 - 1850	1851 - 2200	2201 - 2550	2551 - 3200
Crab frame tube length	[mm]	1050	1400	1750	2100	2450	adapted	

KLDC-D double chain hoist:

- The two chains are guided via a double-chain guide out of the chain hoist to the two different lead-off positions. Both chain lead-offs are rigidly connected to each other by a common frame.
- Hook centre distances from 400 mm to 4600 mm; others on request.
- C-dimension benefit as for low-headroom trolley.
- Speeds V24/6 m/min are not available. Owing to the additional chain return arrangements, increased chain vibrations may occur caused by the polygon effect.
- The chain collector box is divided into two areas by a separation wall so that each chain is separately collected.

For further information, please refer to the 'LDC-D double chain hoist assembly instructions', table page 17.

3.2.3 Selection table

LDC-D double chain hoist in DC-Pro, DC-ProDC (2 hoist speeds)

Load capacity [kg]	Total load capacity [kg]	Chain hoist size	Reeving	Group of mechanisms DIN EN 14492 FEM / ISO	Chain size [mm]	Hoist speed at 50 Hz [m/min]	Hoist speed at 60 Hz [m/min]	Standard hook path [1] H [m]	Motor size [2]
2 x 40	80	5	2 x 1/1	4m / M7	5,3x15,2	24,0/6,0 [3]	28,8/7,2	5 and 8	ZNK 80 B 8/2
2 x 50	100								
2 x 65	125								
2 x 80	160					16,0/4,0	19,2/4,8		
						24,0/6,0 [3]	28,8/7,2		
2 x 100	200					16,0/4,0	19,2/4,8		
		10			7,4x21,2	24,0/6,0 [3]	28,8/7,2		ZNK 100 A 8/2
2 x 125	250	5			5,3x15,2	16,0/4,0	19,2/4,8		ZNK 80 B 8/2
		10			7,4x21,2	24,0/6,0 [3]	28,8/7,2		ZNK 100 A 8/2
2 x 160	315	5			5,3x15,2	8,0/2,0	9,6/2,4		ZNK 80 B 8/2
		10			7,4x21,2	12,0/3,0	14,4/3,6		ZNK 100 B 8/2
						24,0/6,0 [3]	28,8/7,2		
2 x 200	400	5		3m / M6	5,3x15,2	8,0/2,0	9,6/2,4		ZNK 80 B 8/2
		10		4m / M7	7,4x21,2	12,0/3,0	14,4/3,6		ZNK 100 A 8/2
				3m / M6		24,0/6,0 [3]	28,8/7,2		ZNK 100 B 8/2
2 x 250	500	5		2m+ [4] / M5+	5,3x15,2	8,0/2,0	9,6/2,4		ZNK 80 B 8/2
		10		4m / M7	7,4x21,2	12,0/3,0	14,4/3,6		ZNK 100 A 8/2
				2m+ [4] / M5+		24,0/6,0 [3]	28,8/7,2		ZNK 100 B 8/2
2 x 315	630			4m / M7		6,0/1,5	7,2/1,8		ZNK 100 A 8/2
						12,0/3,0	14,4/3,6		ZNK 100 B 8/2
2 x 400	800			3m / M6		6,0/1,5	7,2/1,8		ZNK 100 A 8/2
						12,0/3,0	14,4/3,6		ZNK 100 B 8/2
2 x 500	1000			2m+ [4] / M5+		6,0/1,5	7,2/1,8		ZNK 100 A 8/2
						12,0/3,0	14,4/3,6		ZNK 100 B 8/2
2 x 630	1250		2 x 2/1	4m / M7		6,0/1,5	7,2/1,8		
			2 x 1/1	1Am [7] / M4		8,0/2,0	9,6/2,4		
		16	2 x 1/1	3m [6] / M6	8,7x24,2	12,0/3,0	14,4/3,6	4	ZNK 100 C 8/2
2 x 800	1600	10	2 x 2/1	3m / M6	7,4x21,2	6,0/1,5	7,2/1,8	5 and 8	ZNK 100 B 8/2
		16	2 x 1/1	2m+ [2] [6] / M5+	8,7x24,2	8,0/2,0	9,6/2,4	4	
				2m+ [2] [7] / M5+		12,0/3,0	14,4/3,6		ZNK 100 C 8/2
2 x 1000	2000	10	2 x 2/1	2m+ [4] / M5+	7,4x21,2	6,0/1,5	7,2/1,8	5 and 8	ZNK 100 B 8/2
		25	2 x 1/1	2m+ [2] / M5+	10,5x28,2	8,0/2,0	9,6/2,4	4	ZNK 100 C 8/2
2 x 1250	2500	10	2 x 2/1	1Am [7] / M4	7,4x21,2	4,0/1,0	4,8/1,2	5 and 8	ZNK 100 B 8/2
		16	2 x 2/1	3m [5] / M6	8,7x24,2	6,0/1,5	7,2/1,8	4	ZNK 100 C 8/2
		25	2 x 1/1	1Am / M4	10,5x28,2	8,0/2,0	9,6/2,4		
2 x 1600	3200	16	2 x 2/1	2m+ [2] [5] / M5+	8,7x24,2	4,0/1,0	4,8/1,2		ZNK 100 B 8/2
				2m+ [2] [6] / M5+		6,0/1,5	7,2/1,8		ZNK 100 C 8/2
2 x 2000	4000	25		2m+ [2] / M5+	10,5x28,2	4,0/1,0	4,8/1,2		
2 x 2500	5000			1Am / M4					

1) Larger hook paths on request.
2) See section 'Electric key data' for key motor data.
3) Only with operating limit switch for lifting; operating limit switch for lowering on request (the lower end position must not be approached in normal operation).
4) 2m+ corresponds to 1900 hours at full load.
5) Chain drive FEM 1Am according to EN 818-7
6) Chain drive FEM 1Bm according to EN 818-7
7) Chain drive FEM 1Cm according to EN 818-7

20352544.indd/180713

LDC-D double chain hoist in DCS-Pro, DC-ProFC (infinitely variable hoist speeds)

Load capacity [kg]	Total load capacity [kg]	Chain hoist size	Reeving	Group of mechanisms DIN EN 14492 FEM / ISO	Chain size [mm]	Hoist speed vs_{rated} [m/min]	Hoist speed vs_{max} [m/min]	Standard hook path [1] H [m]	Motor size [2]
2 x 160	315	5	2 x 1/1	4m / M7	5,3x15,2	0,08-8	15	5 and 8	ZNK 80 A 4
		10			7,4x21,2	0,11-12	22		ZNK 100 A 4
2 x 200	400	5		3m / M6	5,3x15,2	0,08-8	15		ZNK 80 A 4
		10		4m / M7	7,4x21,2	0,11-12	22		ZNK 100 A 4
2 x 250	500	5		2m+ [4] / M5+	5,3x15,2	0,08-8	15		ZNK 80 A 4
		10		4m / M7	7,4x21,2	0,11-12	22		ZNK 100 A 4
2 x 315	630					0,06-6	11		
						0,11-12	22		
2 x 400	800			3m / M6		0,06-6	11		
						0,11-12	22		
2 x 500	1000			2m+ [4] / M5+		0,06-6	11		
						0,11-12	22		
2 x 630	1250			1Am [5] / M4		0,04-4	7		
			2 x 2/1	4m / M7		0,06-6	11		
2 x 800	1600			3m / M6					
2 x 1000	2000			2m+ [4] / M5+					
2 x 1250	2500			1Am [5] / M4		0,04-4	7		

KLDC-D double chain hoist in DC-Pro, DC-ProDC (2 hoist speeds)

Load capacity [kg]	Total load capacity [kg]	Chain hoist size	Reeving	Group of mechanisms DIN EN 14492 FEM / ISO	Chain size [mm]	Hoist speed at 50 Hz [m/min]	Hoist speed at 60 Hz [m/min]	Standard hook path [1] H [m]	Motor size [2]
2 x 160	315	10	2/2-2	4m / M7	5,3x15,2	12,0/3,0	14,4/3,6	5 and 8	ZNK 100 A 8/2
2 x 200	400								
2 x 250	500								
2 x 315	630		4/2-2			6,0/1,5	7,2/1,8		ZNK 100 B 8/2
2 x 400	800								
		15	2/2-2		7,4x21,2	8,0/2,0	9,6/2,4		
2 x 500	1000	10	4/2-2		5,3x15,2	6,0/1,5	7,2/1,8		
		15	2/2-2		7,4x21,2	8,0/2,0	9,6/2,4	4	
2 x 630	1250	10	4/2-2		5,3x15,2	6,0/1,5	7,2/1,8	5 and 8	
		15	2/2-2	3m / M6	7,4x21,2	8,0/2,0	9,6/2,4	4	
2 x 800	1600		4/2-2	4m / M7		4,0/1,0	4,8/1,2		
2 x 1000	2000								
2 x 1250	2500			3m / M6					

KLDC-D double chain hoist in DCS-Pro, DC-ProFC (infinitely variable hoist speeds)

Load capacity [kg]	Total load capacity [kg]	Chain hoist size	Reeving	Group of mechanisms DIN EN 14492 FEM / ISO	Chain size [mm]	Hoist speed vs_{rated} [m/min]	Hoist speed vs_{max} [m/min]	Standard hook path [1] H [m]	Motor size [2]
2 x 160	315	10	2/2-2	4m / M7	5,3x15,2	0,11-12	22	5 and 8	ZNK 100 A 4
2 x 200	400								
2 x 250	500								
2 x 315	630		4/2-2			0,06-6	11		
2 x 400	800								
2 x 500	1000								
2 x 630	1250								

Model

3.2.4 LDC-D dimensions

3.2.4.1 LDC-D stationary

Chain hoist size DC 5

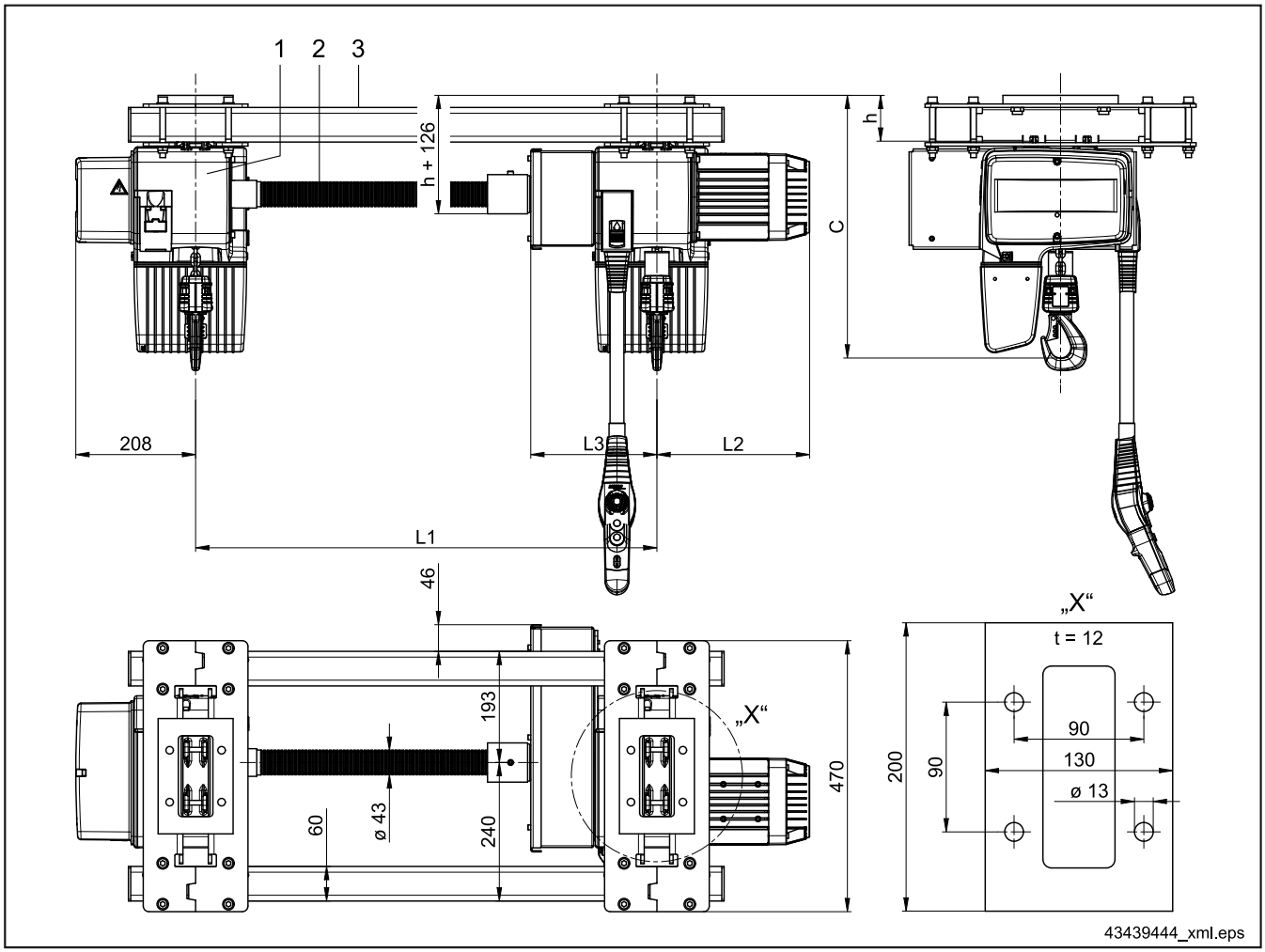

Total load capacity [kg]	Chain hoist size DC-Pro	Reeving	Motor size	C [mm]	h [mm]	L1 [mm]	L2 [mm]	L3 [mm]	Load distribution
500	5	2 x 1/1	ZNK 80 B 8/2	456	80	550 - 3200	265	219	max. 1/3 to 2/3

Hoist block (1), Connection shaft (2), Crab frame (3)

Stationary LDC-D chain hoists consist of a basic module and connecting plates.

Chain hoist size DC 10

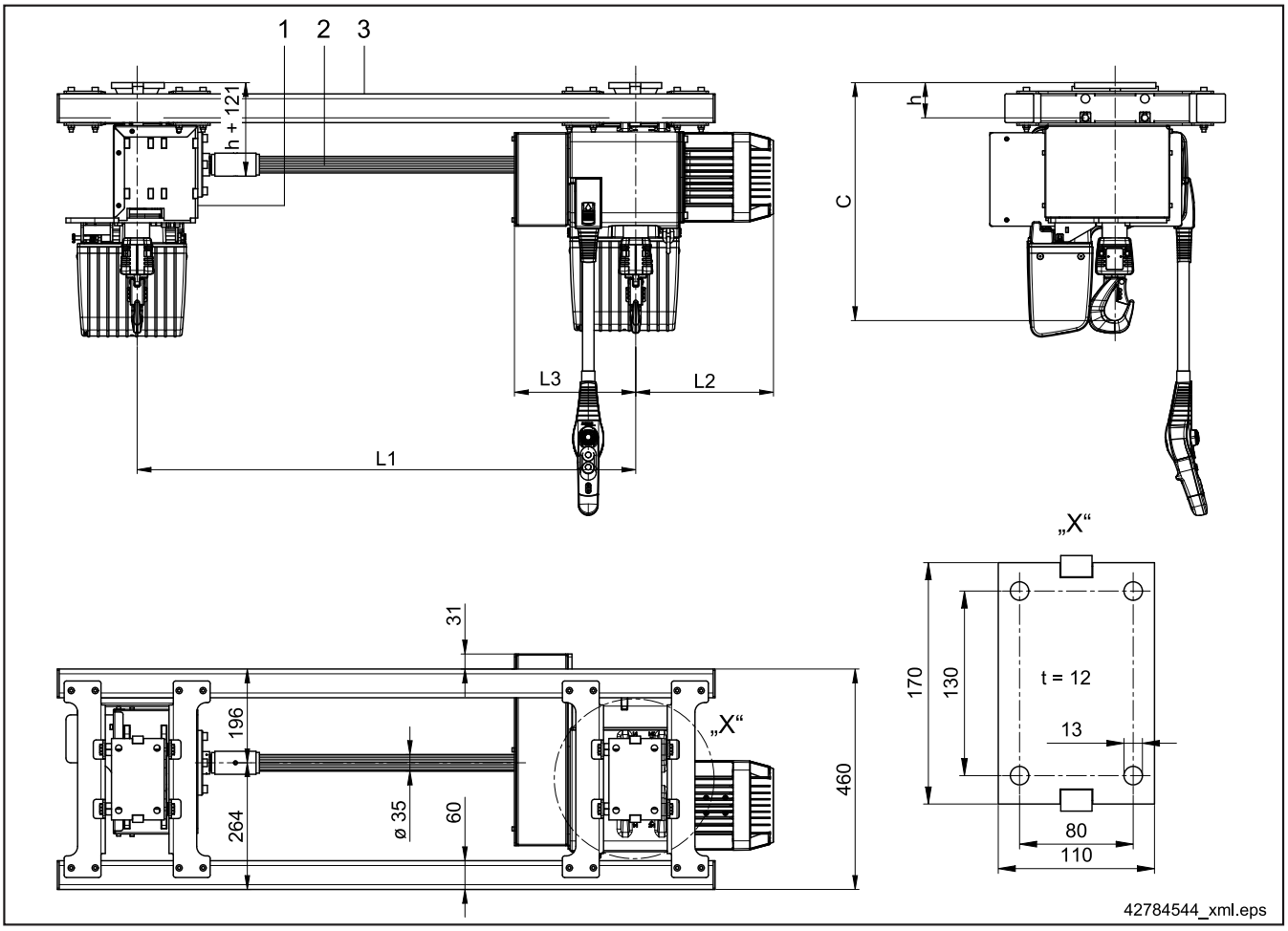

Total load capacity [kg]	Chain hoist size DC-Pro	Reeving	Motor size	C [mm]	h [mm]	L1 [mm]	L2 [mm]	L3 [mm]	Load distribution
1000	10	2 x 1/1	ZNK 100 A 8/2	498	74	550 - 3200	289	253	max. 1/3 to 2/3
1250			ZNK 100 B 8/2				339		
2500		2 x 2/1	ZNK 100 B 8/2	590			304	288	

Hoist block (1), Connection shaft (2), Crab frame (3)

Stationary LDC-D chain hoists consist of a basic module and connecting plates.

3.2.4.2 LDC-D basic module

Chain hoist size DC 5

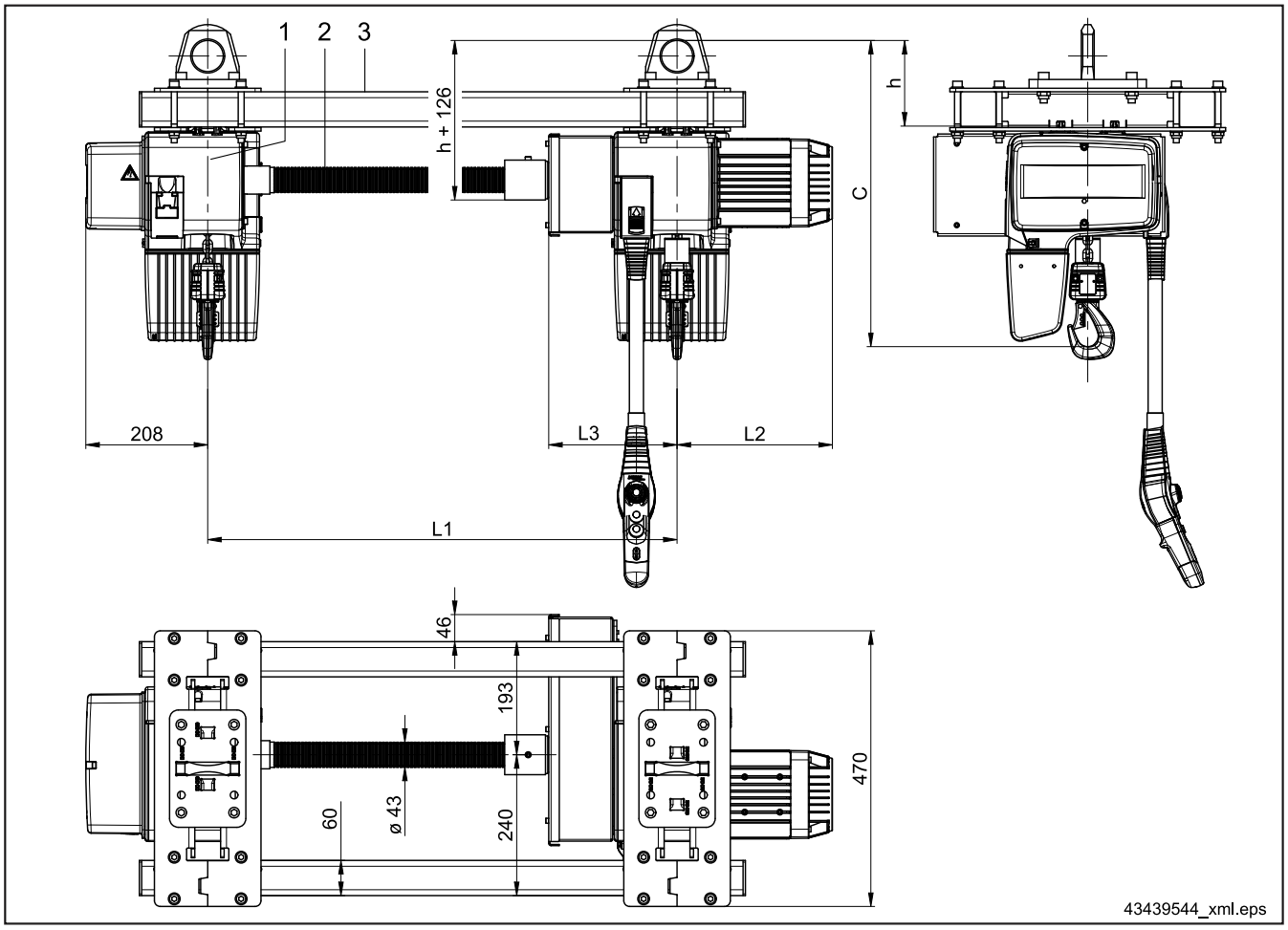

Total load capacity [kg]	Chain hoist size DC-Pro	Reeving	Motor size	C [mm]	h [mm]	L1 [mm]	L2 [mm]	L3 [mm]	Load distribution
500	5	2 x 1/1	ZNK 80 B 8/2	522	146	550 - 3200	265	219	max. 1/3 to 2/3

Hoist block (1), Connection shaft (2), Crab frame (3)

LDC-D chain hoist basic modules are supplied with suspension rings turned 90°.

Chain hoist size DC 10

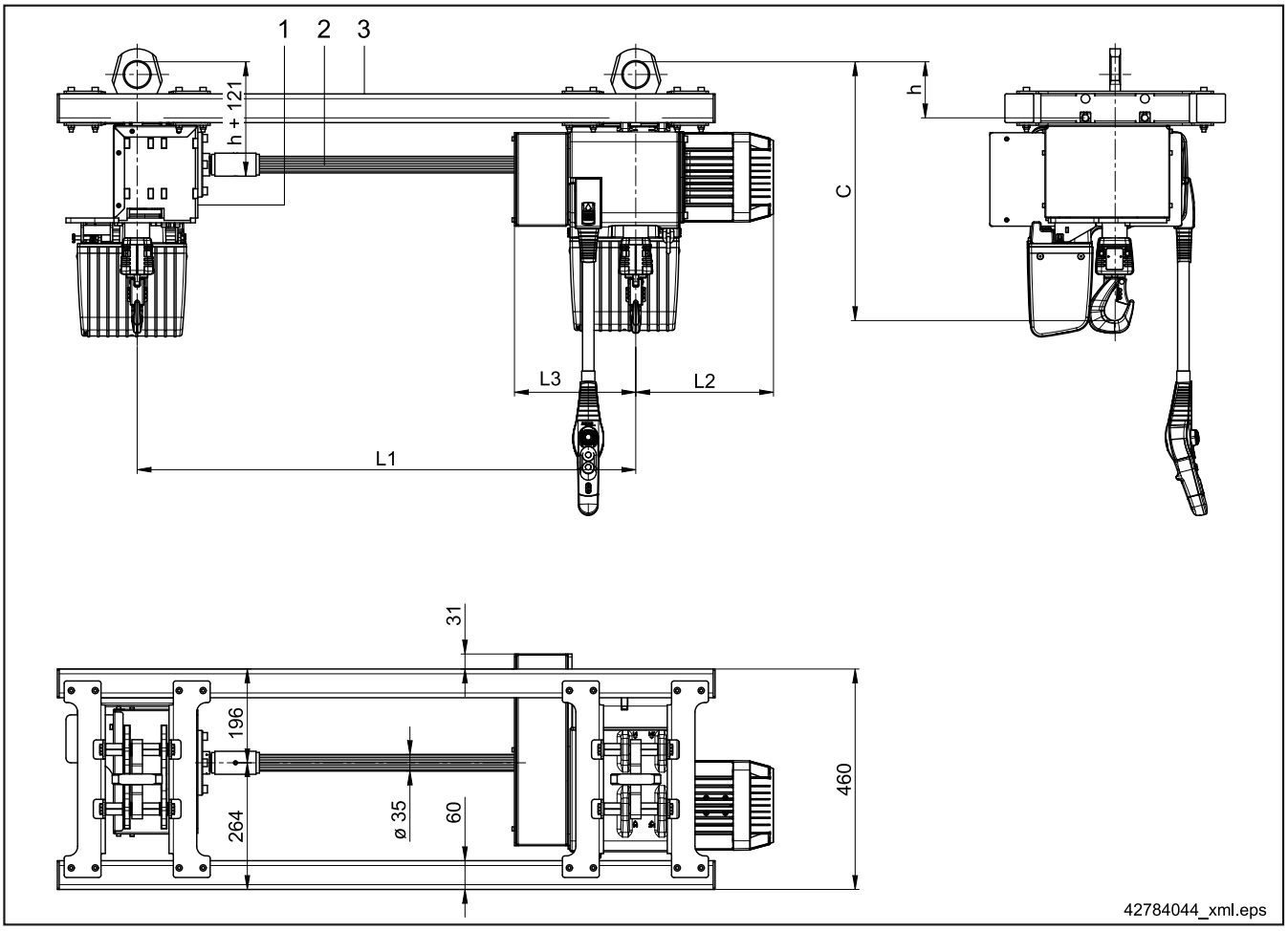

Total load capacity [kg]	Chain hoist size DC-Pro	Reeving	Motor size	C [mm]	h [mm]	L1 [mm]	L2 [mm]	L3 [mm]	Load distribution
1000	10	2 x 1/1	ZNK 100 A 8/2	541	117	550 - 3200	289	253	max. 1/3 to 2/3
1250			ZNK 100 B 8/2				339		
2500		2 x 2/1	ZNK 100 B 8/2	633			304	288	

Hoist block (1), Connection shaft (2), Crab frame (3)

LDC-D chain hoist basic modules are supplied with suspension rings turned 90°.

Chain hoist size DC 16 - 25

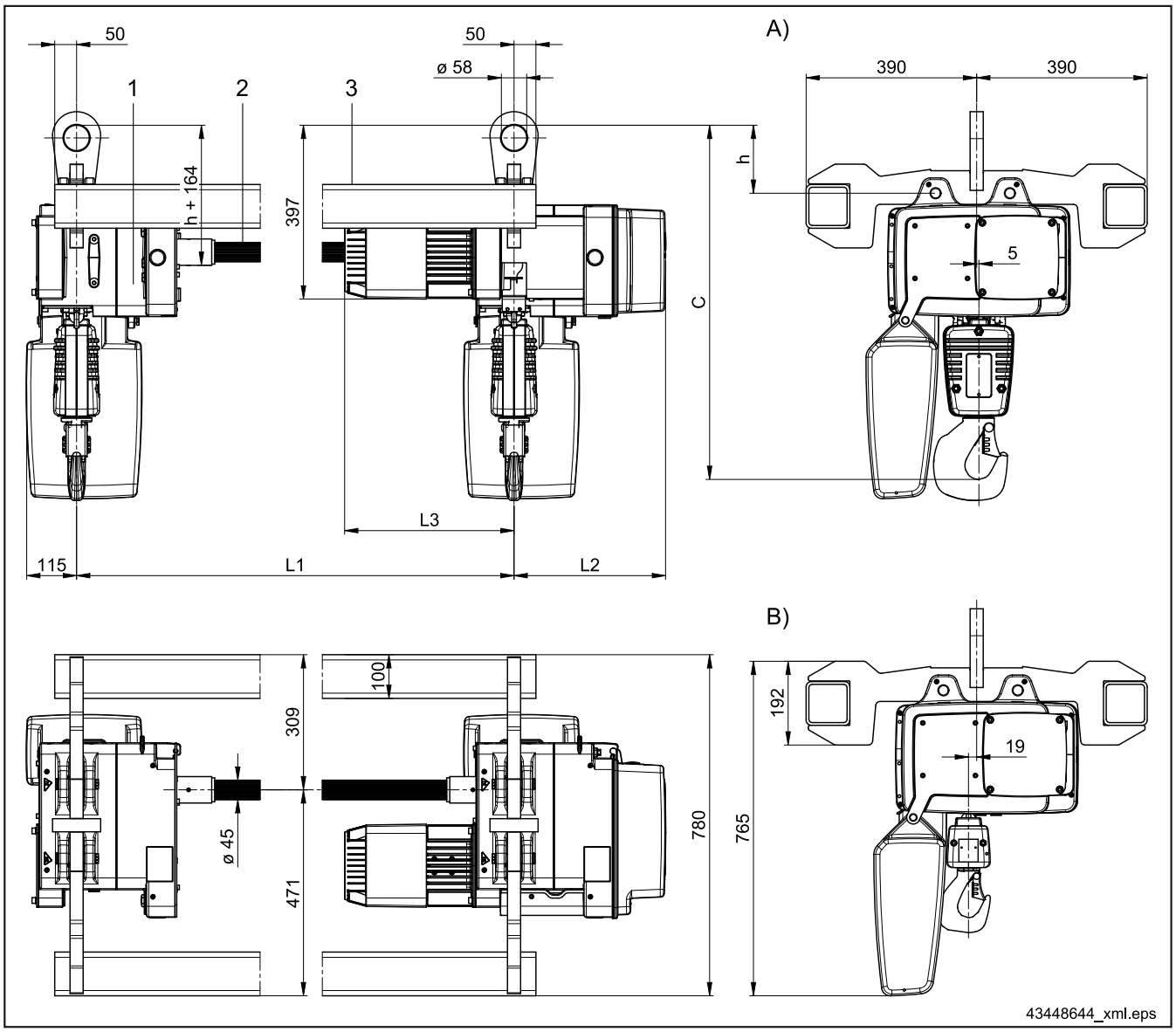

Total load capacity [kg]	Chain hoist size DC-Pro	Reeving	Motor size	C [mm]	h [mm]	L1 [mm]	L2 [mm]	L3 [mm]	Load distribution
1250	16	2 x 1/1	ZNK 100 C 8/2	681	156	800 - 3200	346	386	max. 1/3 to 2/3
1600			ZNK 100 B 8/2					333	
			ZNK 100 C 8/2					386	
2000	25								
2500	16	2 x 2/1		776					
	25	2 x 1/1		681					
3200	16	2 x 2/1	ZNK 100 B 8/2	776				333	
			ZNK 100 C 8/2					386	
4000	25			811					
5000									

Hoist block (1), Connection shaft (2), Crab frame (3)
A) 2/1 reeving
B) 1/1 reeving

LDC-D chain hoist basic modules are supplied with suspension rings turned 90°.
L1 > 3200 mm on request.

3.2.4.3 LDC-D with DCS-Pro variable lifting speed

Chain hoist size DC 5

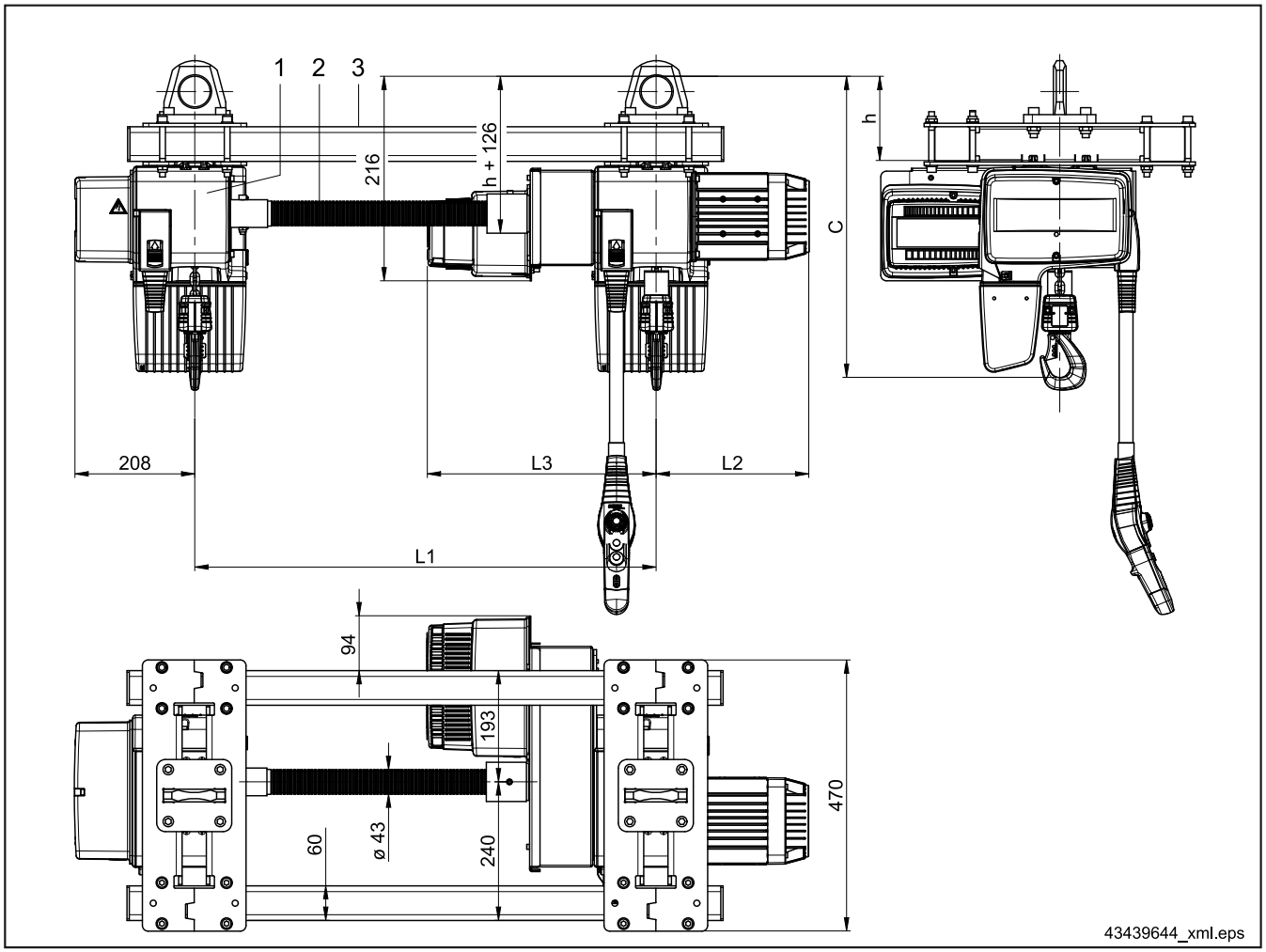

Total load capacity [kg]	Chain hoist size DC-Pro	Reeving	Motor size	C [mm]	h [mm]	L1 [mm]	L2 [mm]	L3 [mm]	Load distribution
500	5	2 x 1/1	ZNK 80 A 4	522	146	700 - 3200	265	397	max. 1/3 to 2/3

Hoist block (1), Connection shaft (2), Crab frame (3)

LDC-D chain hoists with variable lifting-speed control consist of a basic module and suspension rings turned 90°.

Chain hoist size DC 10

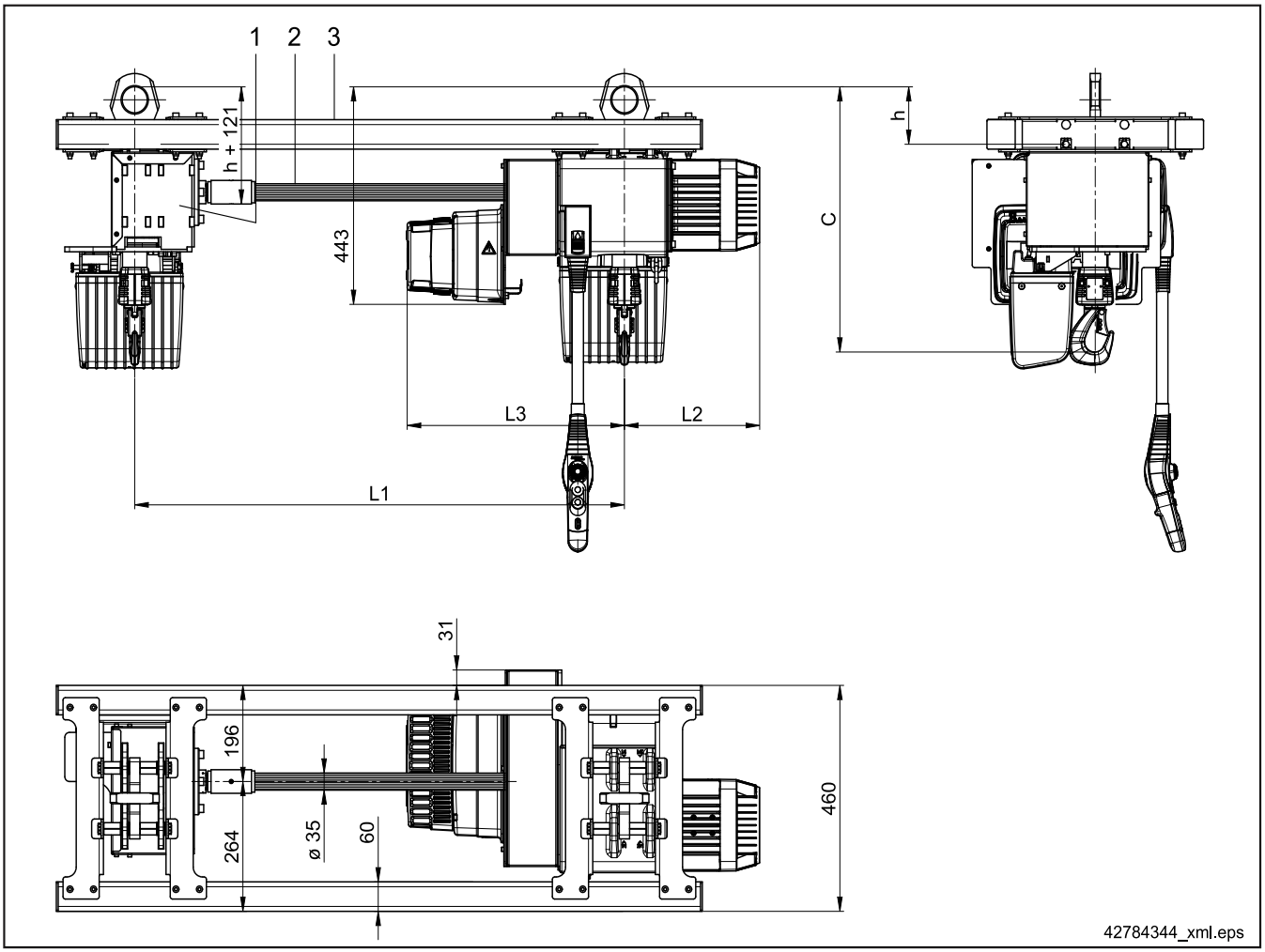

Total load capacity [kg]	Chain hoist size DC-Pro	Reeving	Motor size	C [mm]	h [mm]	L1 [mm]	L2 [mm]	L3 [mm]	Load distribution
1000	10	2 x 1/1	ZNK 100 A 4	541	117	700 - 3200	289	461	max. 1/3 to 2/3
1250							339		
2500		2 x 2/1		633			304	496	

Hoist block (1), Connection shaft (2), Crab frame (3)

LDC-D chain hoists with variable lifting-speed control consist of a basic module and suspension rings turned 90°.

3.2.4.4 LDC-D as a standard-headroom monorail hoist

Chain hoist size DC 5

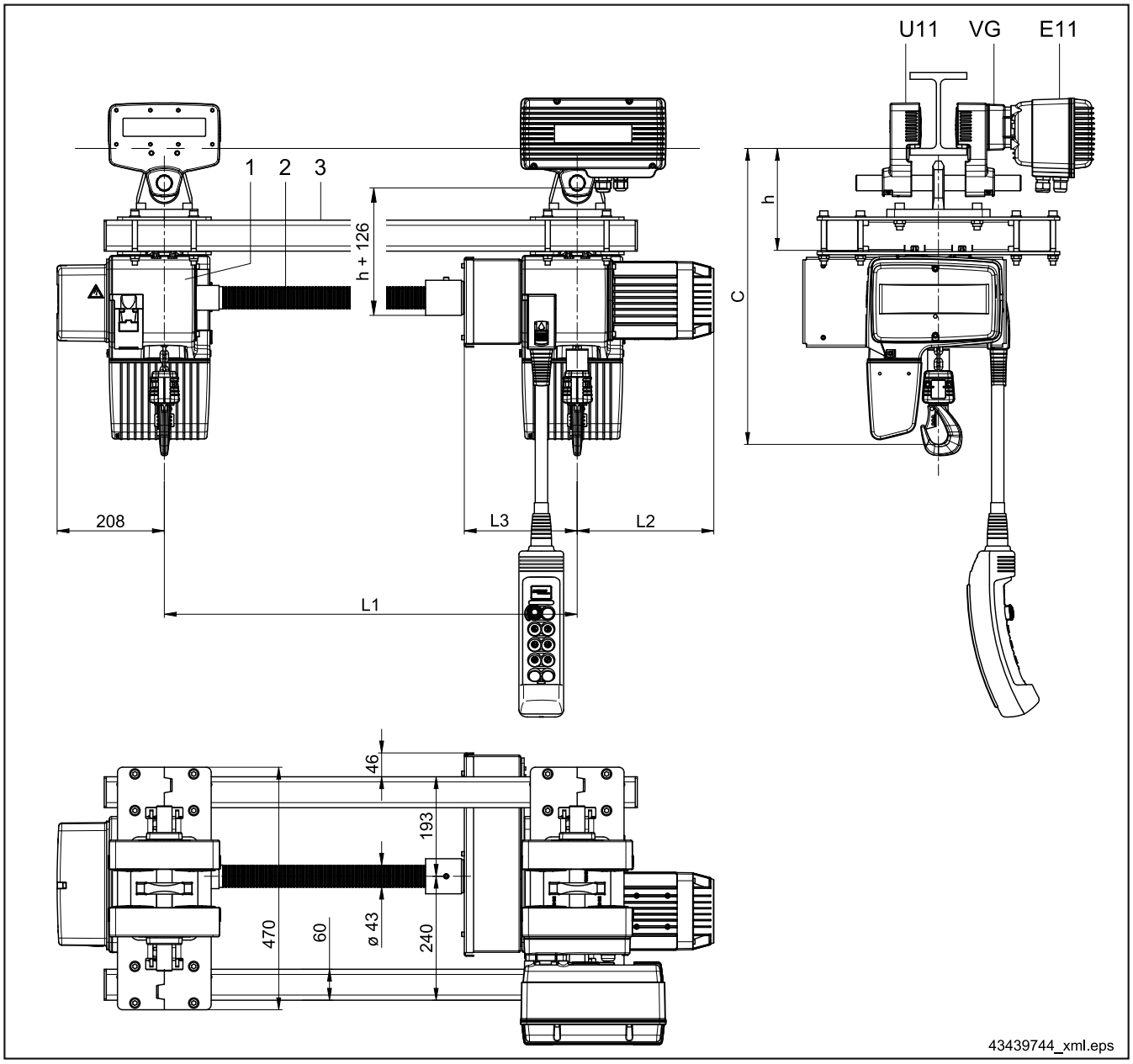

Total load capacity [kg]	Chain hoist size DC-Pro	Reeving	Motor size	C [mm]	h [mm]	L1 [mm]	L2 [mm]	L3 [mm]	Load distribution
500	5	2 x 1/1	ZNK 80 B 8/2	574	198	550 - 3200	265	397	max. 1/3 to 2/3

Hoist block (1), Connection shaft (2), Crab frame (3)

LDC-D chain hoists used as standard-headroom monorail hoists consist of a basic module, suspension rings turned 90° and U trolleys.

Chain hoist size DC 10

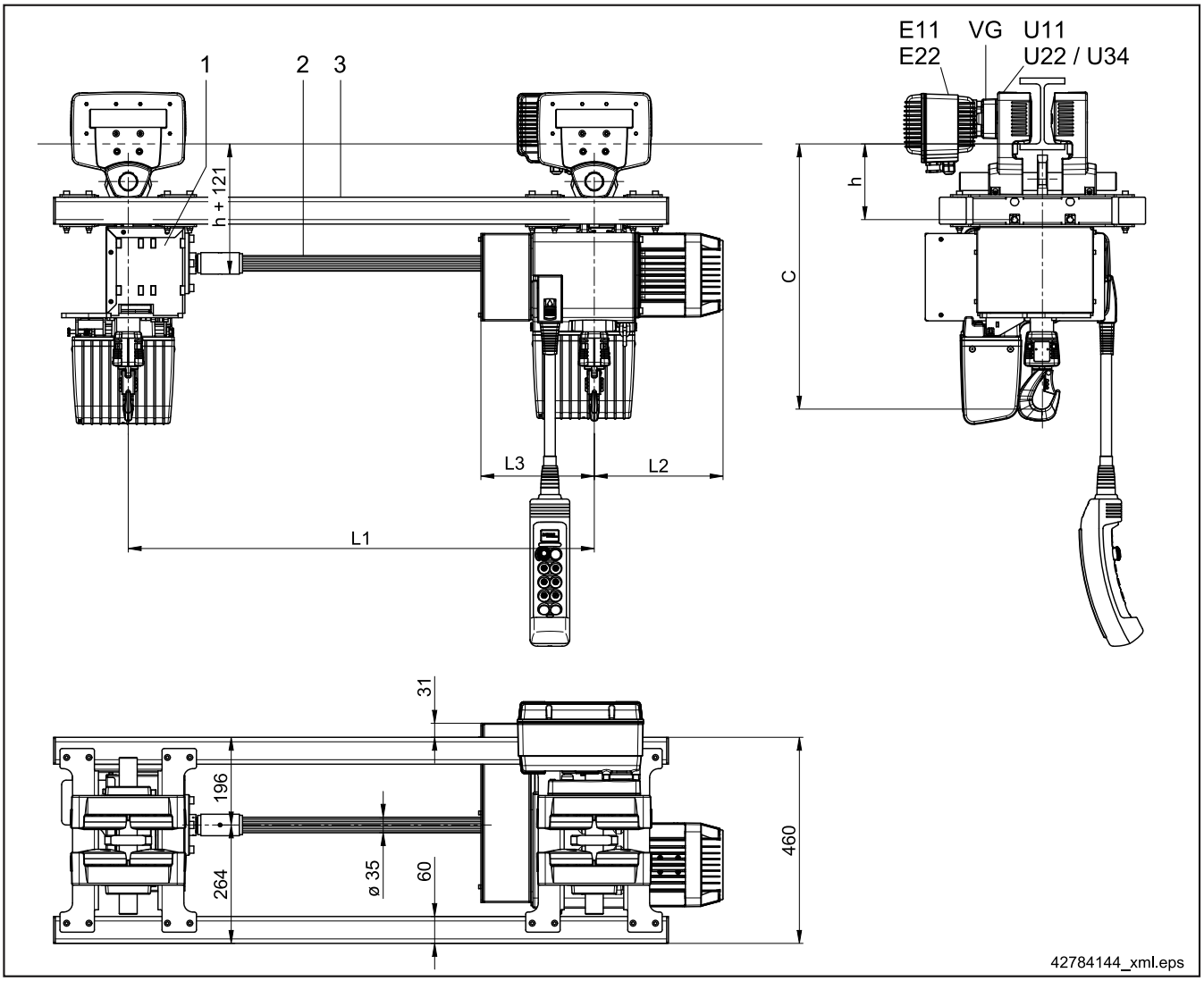

Total load capacity [kg]	Chain hoist size DC-Pro	Reeving	Motor size	Trolley	C [mm]	h [mm]	L1 [mm]	L2 [mm]	L3 [mm]	Load distribution
1000	10	2 x 1/1	ZNK 100 A 8/2	EU11	593	169	550 - 3200	289	253	max. 1/3 to 2/3
1250			ZNK 100 B 8/2	EU22	645	233		339		
2500		2 x 2/1	ZNK 100 B 8/2		697			304	288	

Hoist block (1), Connection shaft (2), Crab frame (3)

LDC-D chain hoists used as standard-headroom monorail hoists consist of a basic module, suspension rings turned 90° and U trolleys.

3.2.4.5 LDC-D with KBK trolleys

Chain hoist size DC 5

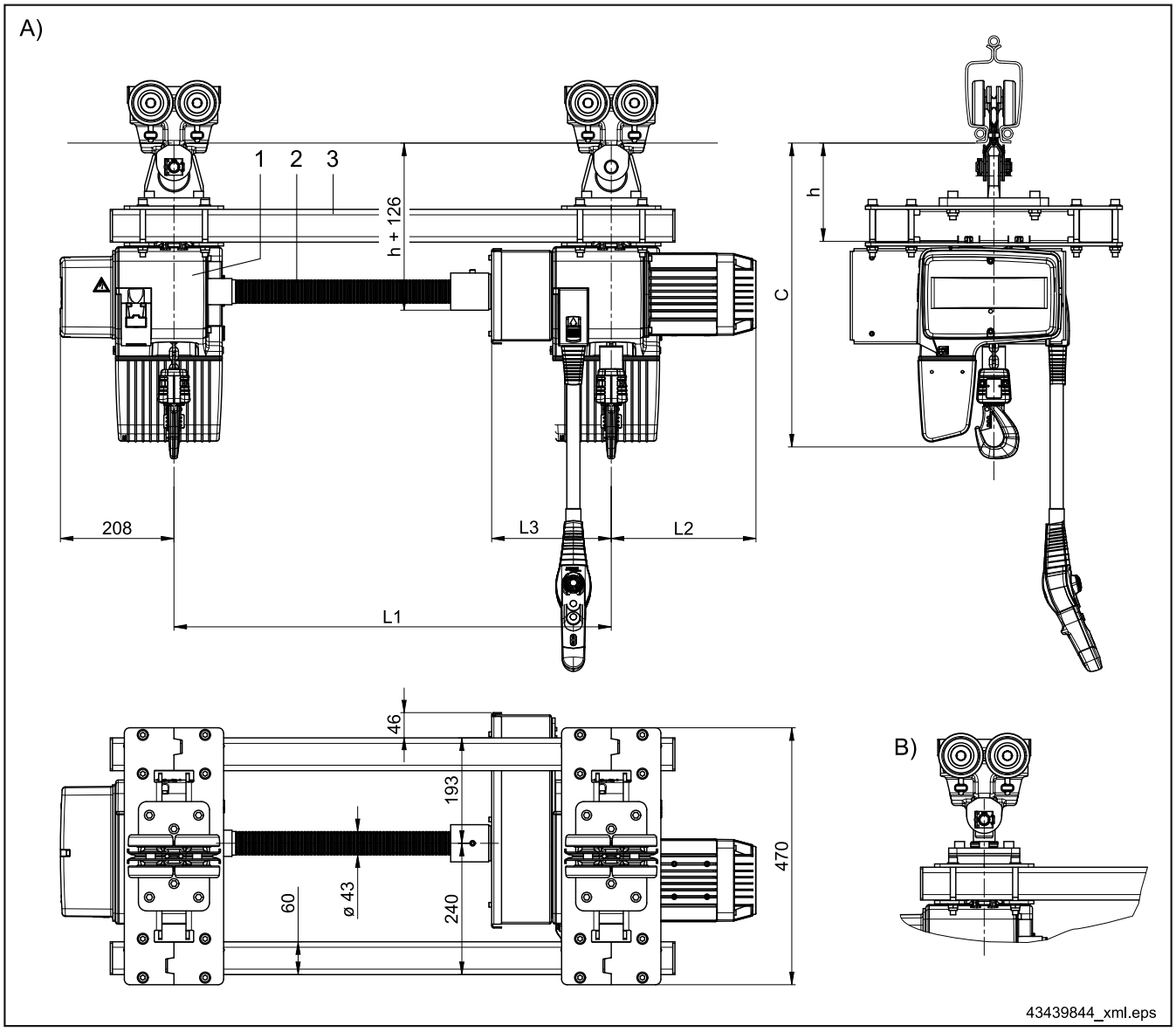

Total load capacity [kg]	Chain hoist size DC-Pro	Reeving	Motor size	Straight travel Trolley	C [mm]	h [mm]	Travel on curved track Trolley	C [mm]	h [mm]	L1 1) [mm]	L2 [mm]	L3 [mm]	Load distribution
500	5	2 x 1/1	ZNK 80 B 8/2	Single trolley (A)	556	180	Single trolley (B)	566	190	550 - 3200	265	397	max. 1/2 to 1/2

Hoist block (1), Connection shaft (2), Crab frame (3)

Straight travel: LDC-D chain hoists with KBK trolleys consist of a basic module, suspension rings turned 90° and KBK trolleys.

Travel on curved track: LDC-D chain hoists with KBK trolleys consist of a basic module, adapters for travel on curved tracks and KBK trolleys.

1) for travel on curved track L1 ≤ 1500 mm

Chain hoist size DC 10

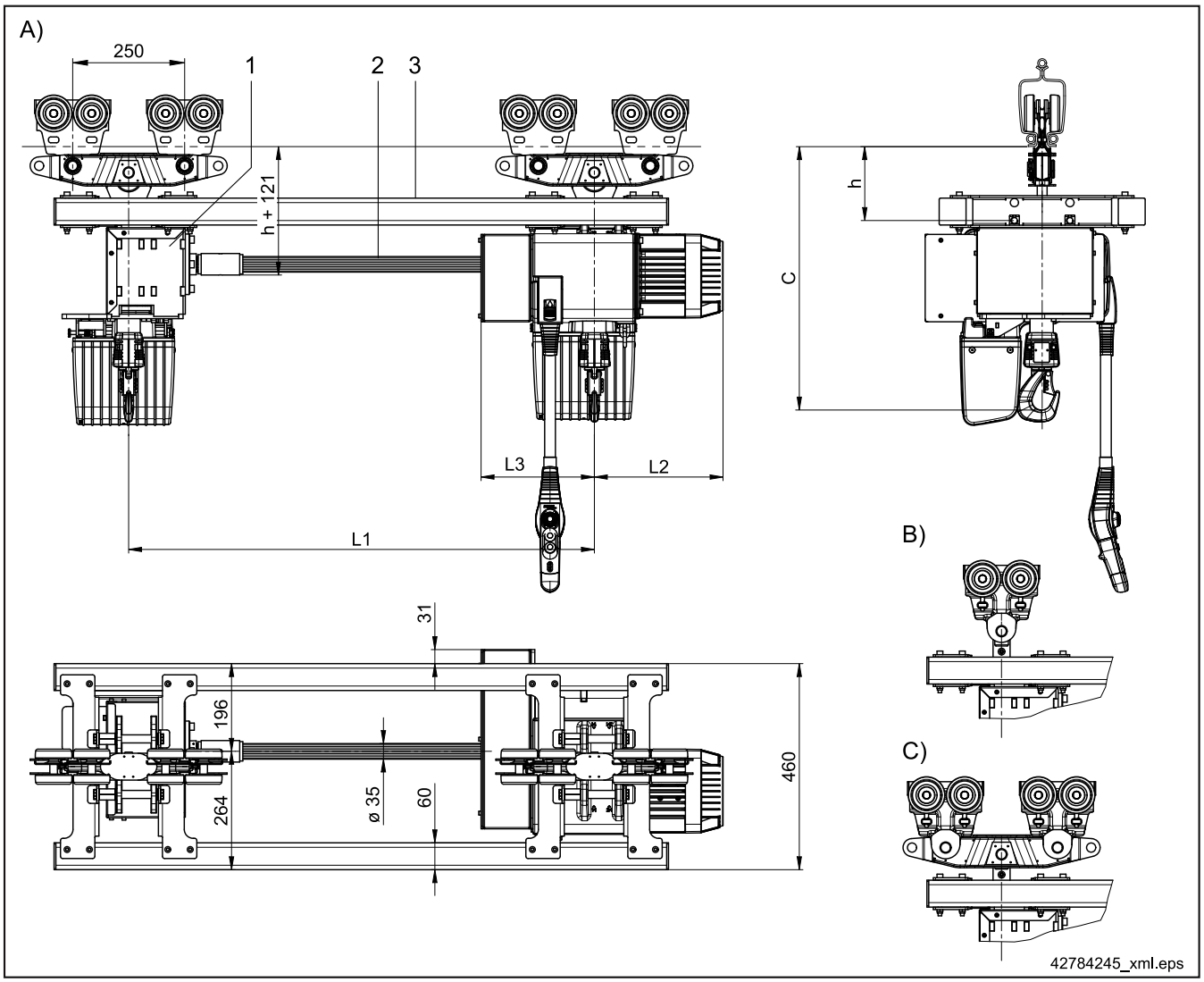

Total load capacity [kg]	Chain hoist size DC-Pro	Reeving	Motor size	Straight travel Trolley	C [mm]	h [mm]	Travel on curved track Trolley	C [mm]	h [mm]	L1 [1] [mm]	L2 [mm]	L3 [mm]	Load distribution
1000	10	2 x 1/1	ZNK 100 A 8/2	Articulated frame (A)	591	167	Single trolley (B)	571	162	550 - 3200	289	253	max. 1/2 to 1/2
1250			ZNK 100 B 8/2				Articulated frame (C)	586			339		
2500		2 x 2/1	ZNK 100 B 8/2		683			678			304	288	

Hoist block (1), Connection shaft (2), Crab frame (3)

Straight travel: LDC-D chain hoists with KBK trolleys consist of a basic module, suspension rings turned 90° and KBK trolleys.

Travel on curved track: LDC-D chain hoists with KBK trolleys consist of a basic module, adapters for travel on curved tracks and KBK trolleys.

1) for travel on curved track L1 ≤ 1500 mm

3.2.4.6 LDC-D with articulated trolley
Chain hoist size DC 10

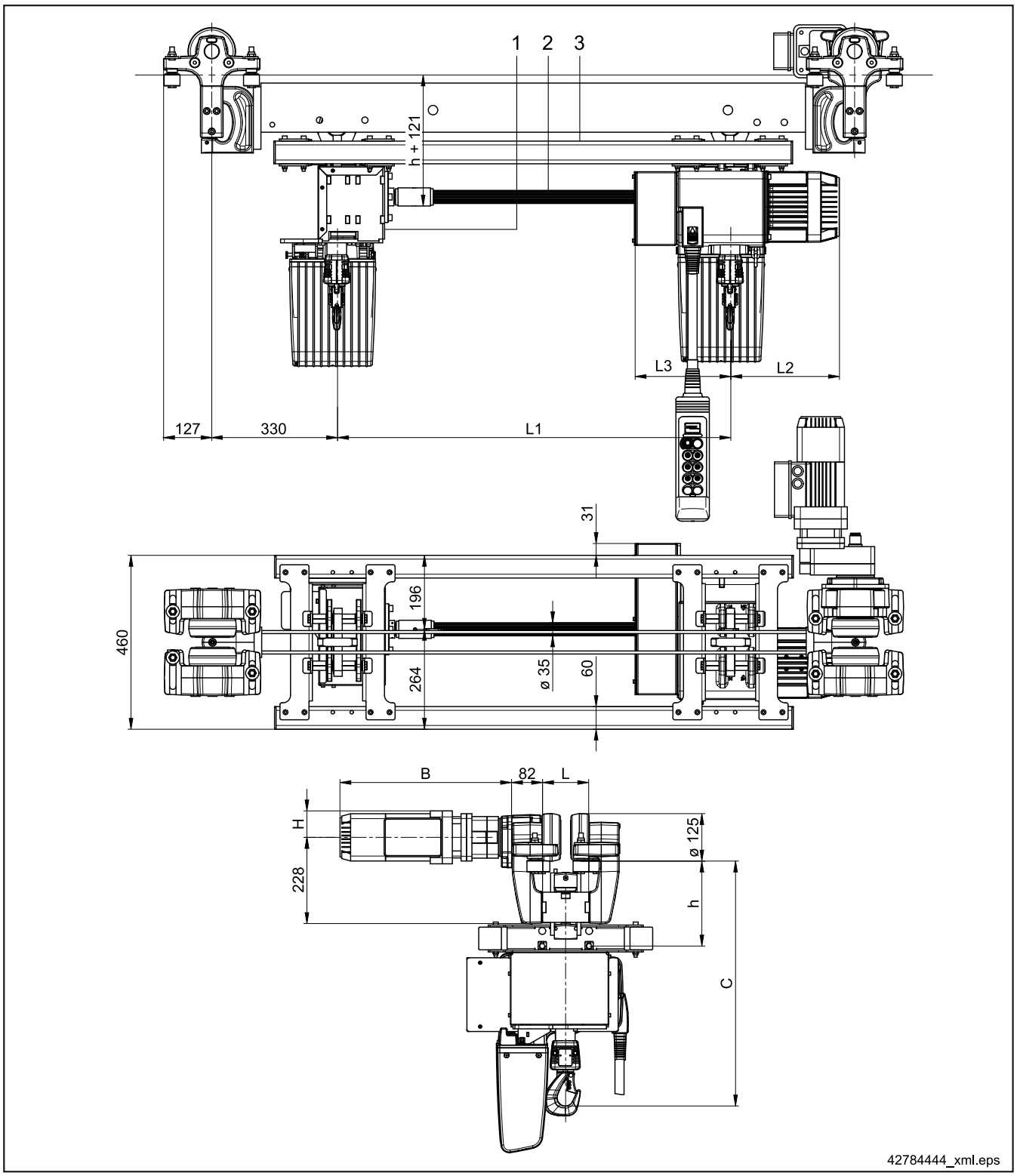

Total load capacity [kg]	Chain hoist size DC-Pro	Reeving 1)	Motor size	C [mm]	h [mm]	L1 [mm]	L2 [mm]	L3 [mm]	Load distribution
1000	10	2 x 1/1	ZNK 100 A 8/2	649	225	550 - 3200	289	253	max. 1/3 to 2/3
1250			ZNK 100 B 8/2				339		
2500		2 x 2/1	ZNK 100 B 8/2	741			304	288	

1) For dimensions A, B and H see ‘Articulated trolley assembly instructions’.

1) Hoist block
2) Connection shaft
3) Crab frame

LDC-D chain hoists used as articulated travelling hoists consist of a basic module and a crossbar with articulated trolleys.

3.2.5 KLDC-D dimensions

L1 [mm]	400 - 1700	1800 - 3200	3300 - 4600
Number of weights	1	2	3

Depending on the weight, the C-dimension is increased by 12 mm.

3.2.5.1 KLDC-D stationary

Chain hoist size DC 10, max. load capacity 1250 kg (Chain size 2x 5,3x15,2 mm) 1)

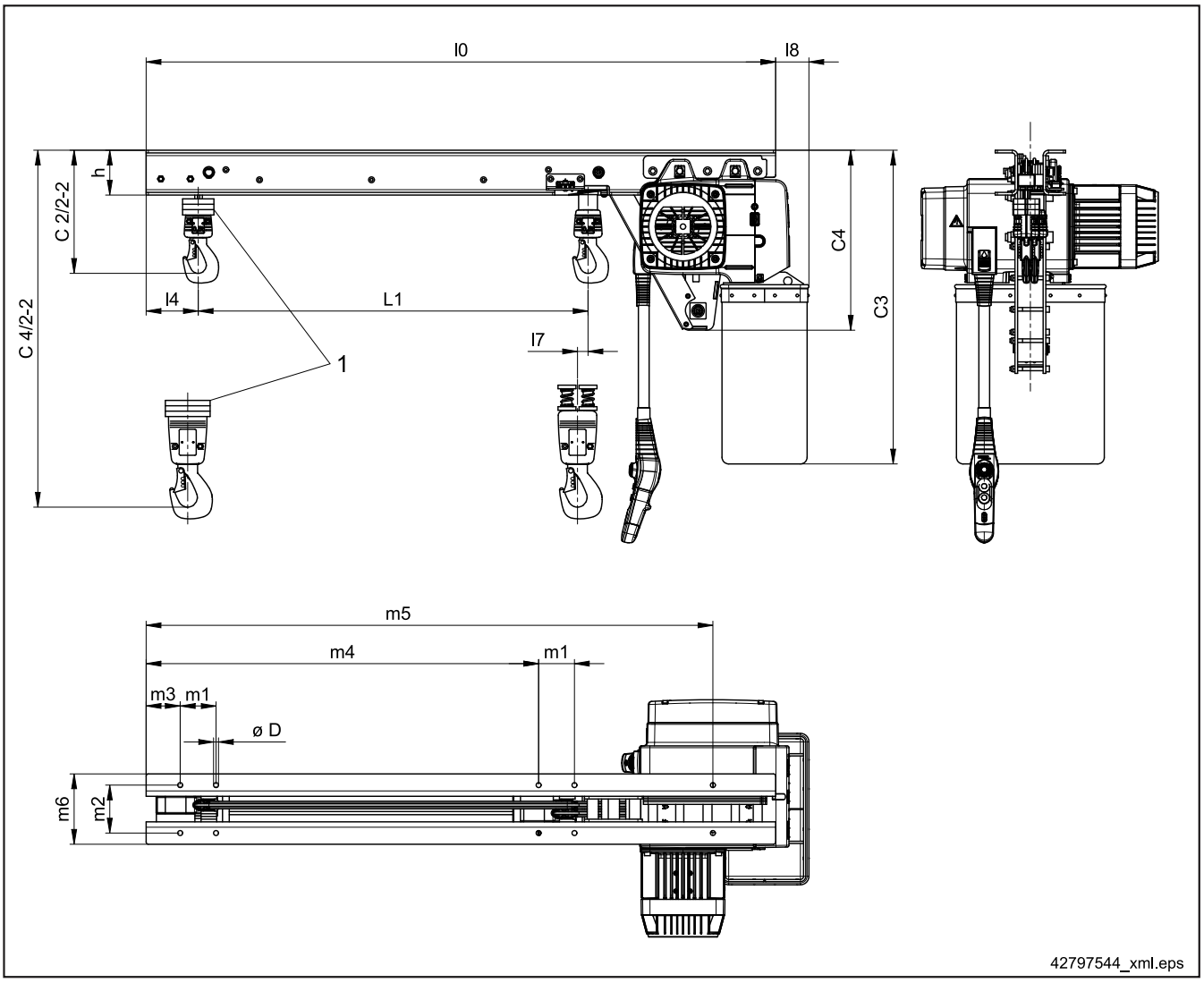

l0 [mm]	L1 min [mm]	l4 [mm]	l7 [mm]	l8 [mm]	C 2/2-2 min [mm]	C 4/2-2 min [mm]	C3 min [mm]	C4 [mm]	h [mm]
L1 + 535	400 - 4600	116	23,5	74	275	387	700	402	100

m1 [mm]	m2 [mm]	m3 [mm]	dia. D [mm]	m4 [mm]	m5 [mm]	m6 [mm]
80	107	76	11	L1 + 76	m4 + m1 + 227	157

The additional weight (1) increases the mass of the unloaded hook assembly / bottom block. This prevents blocking of the chain during lowering.

1) KLDC-D15 on request.

3.2.5.2 KLDC-D basic module

Chain hoist size DC 10, max. load capacity 1250 kg (Chain size 2x 5,3x15,2 mm)

Chain hoist size DC 15, max. load capacity 2500 kg (Chain size 2x 7,4x21,2 mm)

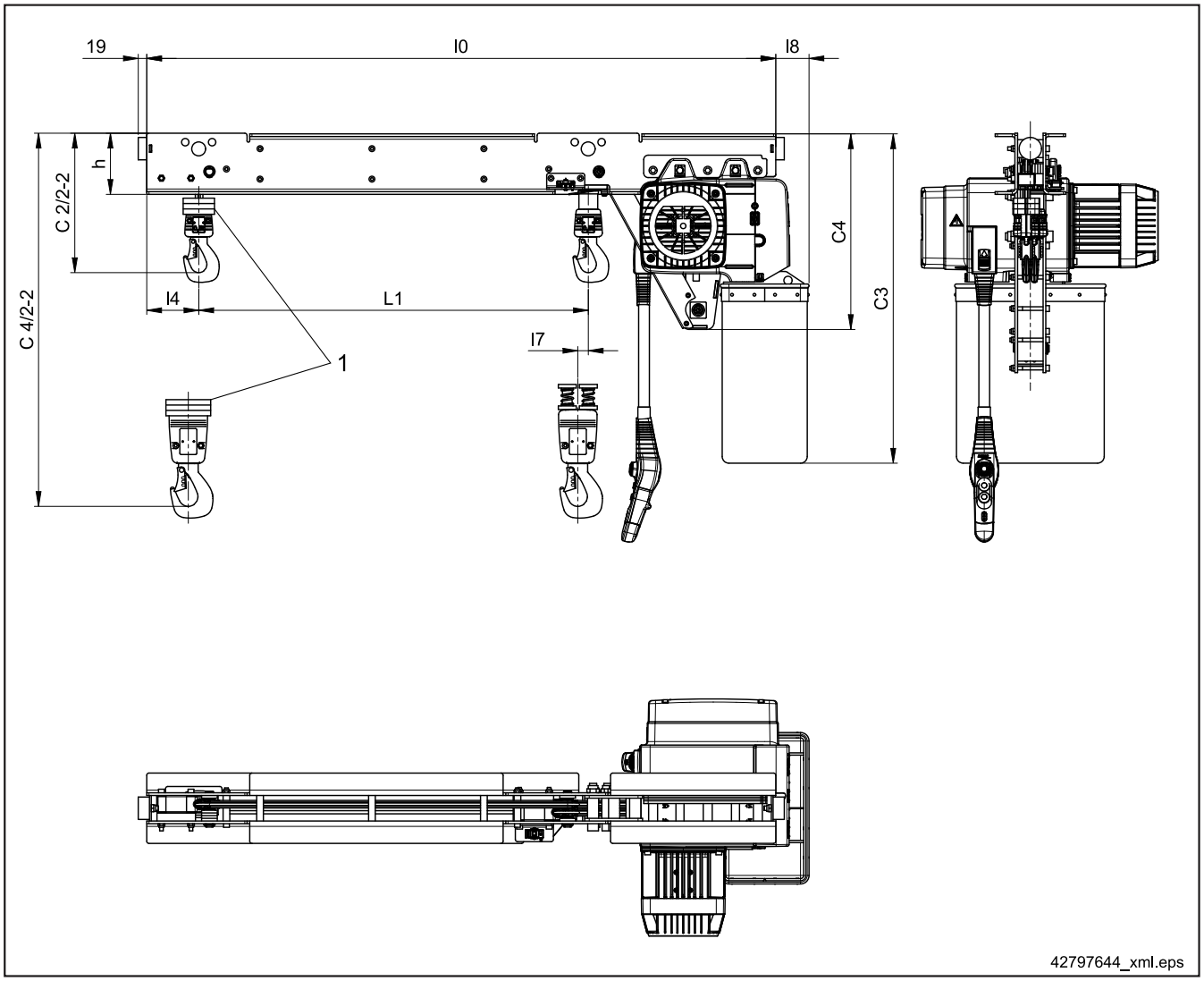

Chain hoist size	l0 [mm]	L1 min [mm]	l4 [mm]	l7 [mm]	l8 [mm]	C 2/2-2 min [mm]	C 4/2-2 min [mm]	C3 min [mm]	C4 [mm]	h [mm]
DC 10	L1 + 535	400 - 4600	116	23,5	74	311	423	736	438	136
DC 15	L1 + 655		158	32,4	119	434	522	770	493	187

The additional weight (1) increases the mass of the unloaded hook assembly / bottom block. This prevents blocking of the chain during lowering.

3.2.5.3 KLDC-D as a standard-headroom monorail hoist

Chain hoist size DC 10, max. load capacity 1250 kg (Chain size 2x 5,3x15,2 mm)

Chain hoist size DC 15, max. load capacity 2500 kg (Chain size 2x 7,4x21,2 mm)

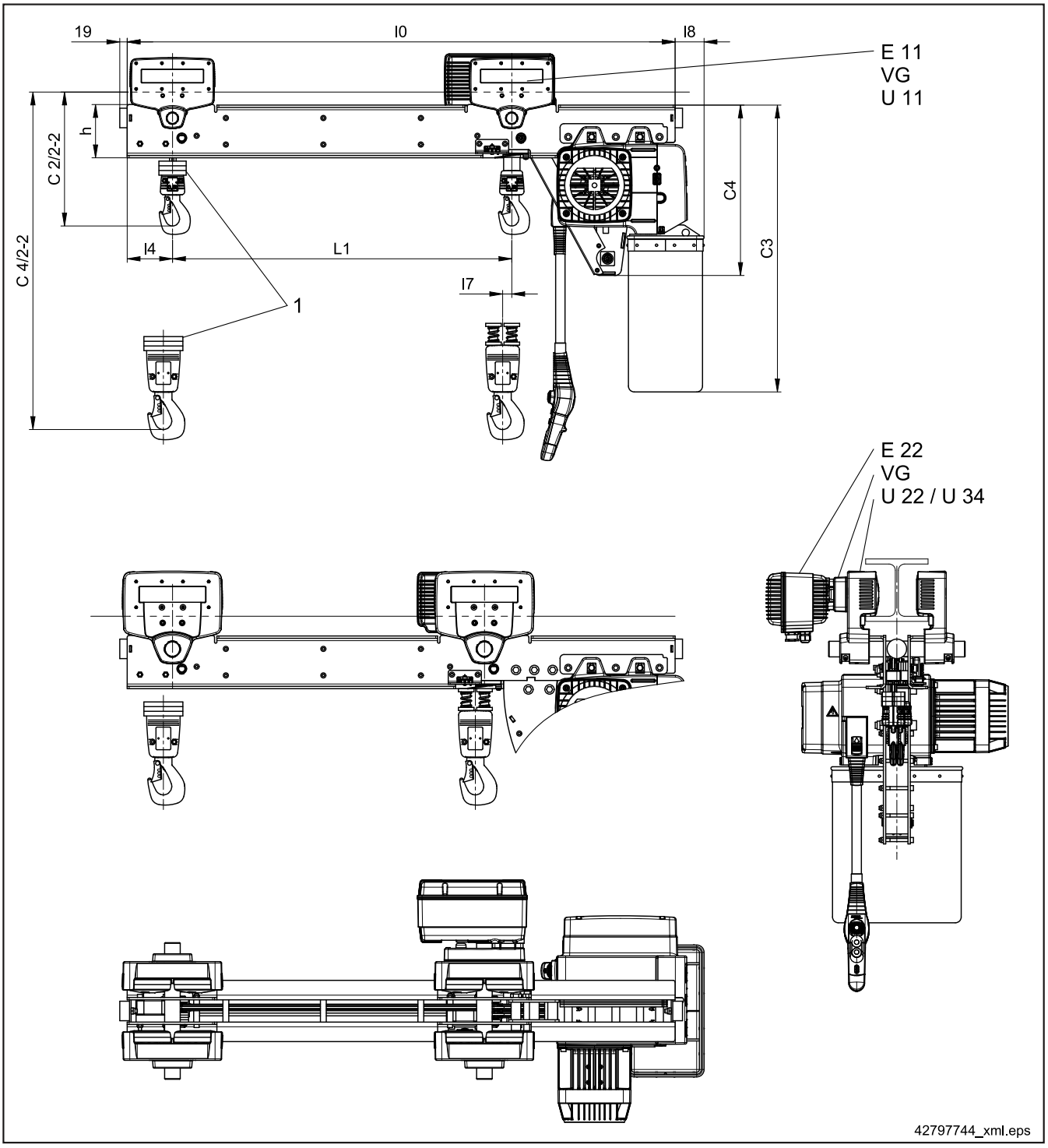

Chain hoist size	Trolley	l0 [mm]	L1 min [mm]	l4 [mm]	l7 [mm]	l8 [mm]	C 2/2-2 min [mm]	C 4/2-2 min [mm]	C3 min [mm]	C4 [mm]	h [mm]
DC 10	U11	L1 + 535	400 - 4600	116	23,5	74	343	452	736	438	136
	U22 / U34						357	469			
DC 15		L1 + 655		158	32,4	119	470	558	805	529	187

The additional weight (1) increases the mass of the unloaded hook assembly / bottom block. This prevents blocking of the chain during lowering.

3.2.5.4 KLDC-D with KBK trolleys

Chain hoist size DC 10, max. load capacity 1250 kg (Chain size 2x 5,3x15,2 mm) 2)

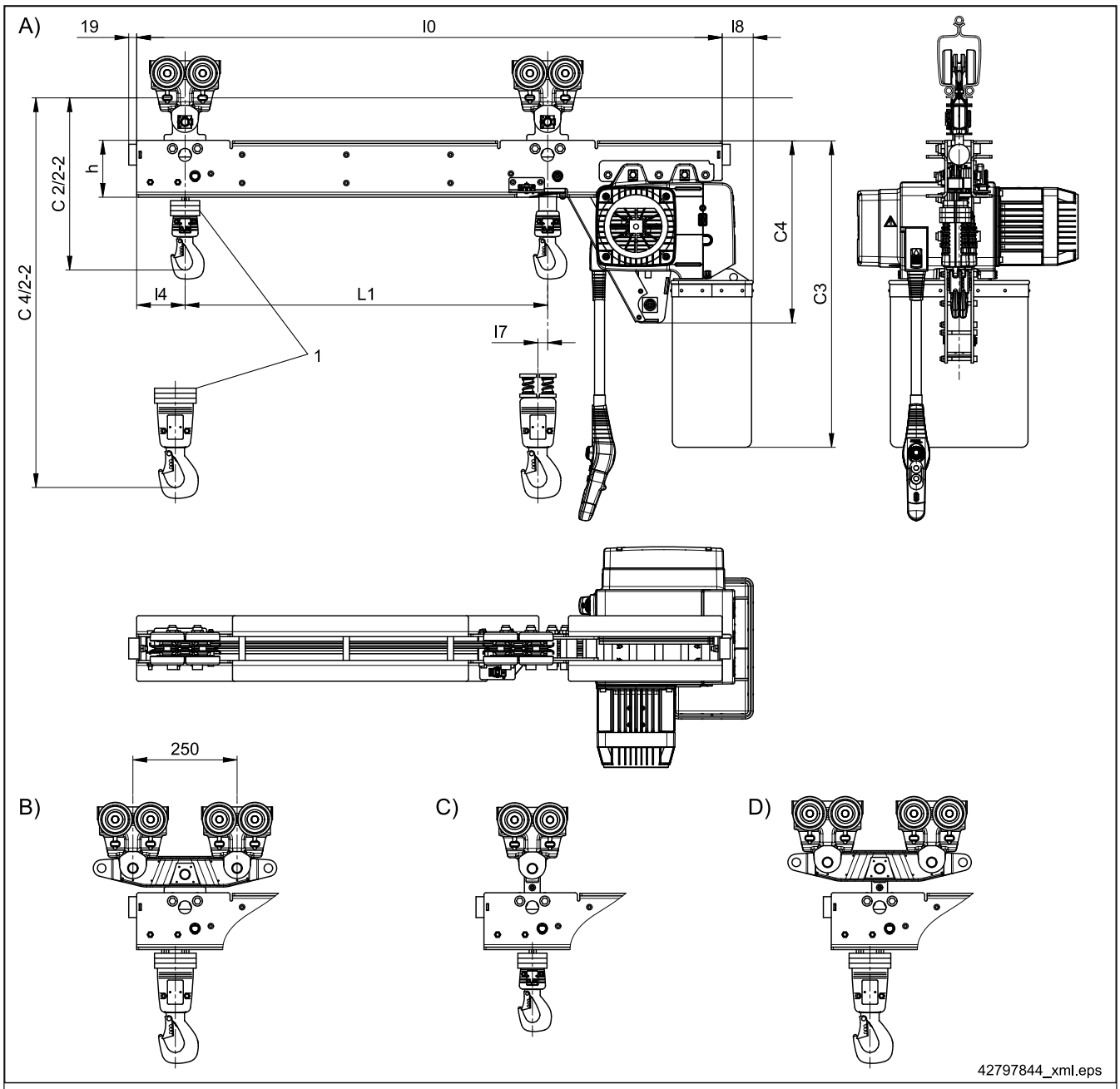

Total load capacity KBK [kg]	Trolley	2/2-2 C min 1) [mm]	4/2-2 C min 1) [mm]	l0 [mm]	L1 min [mm]	l4 [mm]	l7 [mm]	l8 [mm]	C3 min [mm]	C4 [mm]	h [mm]
1000	Single trolley for straight travel	398 (A)		L1 + 535	400 - 4600	116	23,5	74	736	438	136
	Single trolley for curve travel	412 (C)									
1250	Articulated frame for straight travel		435 (B)								
	Articulated frame for curve travel		451 (D)								

The additional weight (1) increases the mass of the unloaded hook assembly / bottom block. This prevents blocking of the chain during lowering.

For further information, please refer to the ‘KBK classic technical data’.

1) C dimension from lower edge of KBK section.
2) KLDC-D15 on request.

20352544.indd/180713

3.3 RUDDC / EUDDC / RKDDC / EKDDC articulated trolleys

3.3.1 Use

For small curve radii up to 800 mm, the UDDC / KDDC monorail hoist is fitted with articulated trolleys. Guide rollers on the side ensure quiet and free running operation on the track.

Standard-headroom monorail hoist or low-headroom versions are available.

3.3.2 Properties

- Articulated trolley with two travel speeds;
- Flange width 82 - 300 mm, min. curve radius 800 mm;
- Contactor control 24 V, DSE-10C control pendant;
- Cross-travel speed stages by means of Polu-box for articulated trolleys with DCS-Pro and DSE-10CS control pendant;
- Chain hoist parallel to the track girder on request.

The following components are included:

- DC Polu-box (to control the travel motor of DC 1 - 15 chain hoists) incl. fitting on the trolley;
- Crab module (to control the travel motor of DC 16 - 25 chain hoists);
- Connecting cables to the travel drive;
- EUD articulated trolley.

3.3.3 Selection table

<table>
<tr><th rowspan="2">Load capacity [kg]</th><th rowspan="2">Chain hoist DC</th><th rowspan="2">Reeving</th><th colspan="4">Travel drive for possible cross-travel speeds in approx. ... m/min</th></tr>
<tr><th>V12,5/3,15</th><th>V20/5</th><th>V31,5/8</th><th>V40/10</th></tr>
<tr><td>≤ 125</td><td>1</td><td rowspan="5">1/1</td><td rowspan="15">ZBF 63 A 8/2</td><td rowspan="11">ZBF 63 A 8/2</td><td rowspan="8">ZBF 63 A 8/2</td><td rowspan="5">ZBF 63 A 8/2</td></tr>
<tr><td>≤ 250</td><td>2</td></tr>
<tr><td>≤ 500</td><td>5</td></tr>
<tr><td rowspan="2">≤ 1000</td><td>10</td></tr>
<tr><td>15</td></tr>
<tr><td rowspan="4">1250</td><td rowspan="2">10</td><td>1/1</td><td rowspan="6">ZBF 71 A 8/2</td></tr>
<tr><td>2/1</td></tr>
<tr><td>15</td><td rowspan="2">1/1</td></tr>
<tr><td>16</td></tr>
<tr><td rowspan="3">1600</td><td>10</td><td>2/1</td><td rowspan="5">ZBF 71 A 8/2</td></tr>
<tr><td>15</td><td rowspan="2">1/1</td></tr>
<tr><td>16</td></tr>
<tr><td rowspan="3">2000</td><td>10</td><td rowspan="2">2/1</td><td rowspan="6">ZBF 80 A 8/2</td></tr>
<tr><td>15</td></tr>
<tr><td>25</td><td>1/1</td><td rowspan="4">ZBF 71 A 8/2</td><td rowspan="4">ZBF 80 A 8/2</td></tr>
<tr><td rowspan="4">2500</td><td>10</td><td rowspan="3">2/1</td></tr>
<tr><td>15</td></tr>
<tr><td>16</td></tr>
<tr><td>25</td><td>1/1</td></tr>
<tr><td rowspan="2">3200</td><td>15</td><td rowspan="4">2/1</td><td rowspan="4">ZBF 90 B 8/2</td></tr>
<tr><td>16</td></tr>
<tr><td>4000</td><td rowspan="2">25</td><td rowspan="2">ZBF 71 A 8/2</td><td rowspan="2">ZBF 80 A 8/2</td><td rowspan="2">ZBF 90 B 8/2</td></tr>
<tr><td>5000</td></tr>
</table>

For further information, please refer to the 'KDDC/UDDC double chain hoist assembly instructions', table page 17.

3.3.4 Dimensions

3.3.4.1 RUDDC / EUDDC standard-headroom travelling hoist

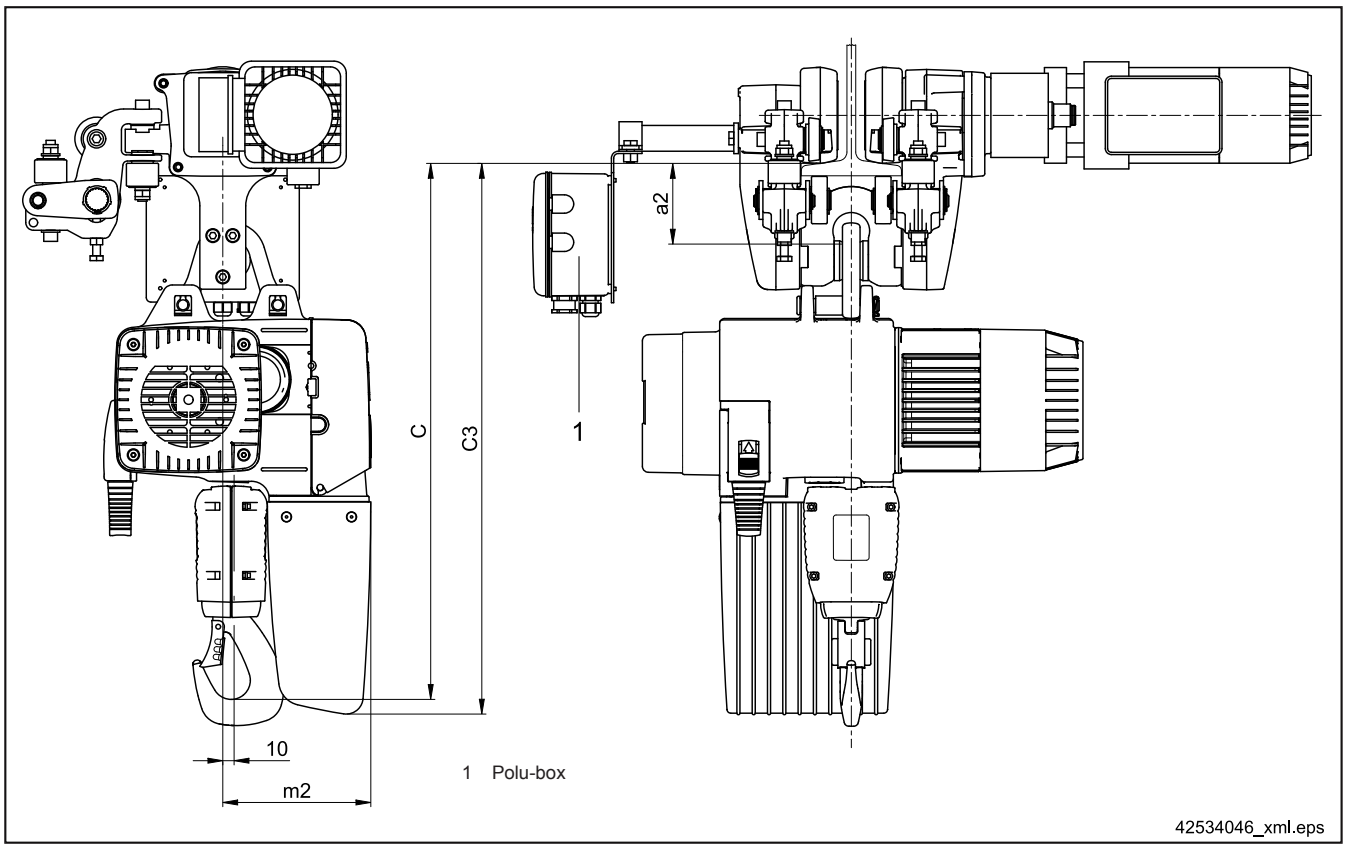

Chain hoist	Reeving	C for flange width < 170 mm 1) 2)			
		DC-Pro, DCS-Pro	Hook path	C3	m2
DC 1 - 2	1/1	469	H5	482	148
			H8	502	
			H25	566	203
DC 5	1/1	521	H5	532	151
			H8	562	
			H20	633	213
DC 10	1/1	610	H5	624	194
			H8	713	
			H20	736	267
	2/1	702	H5	713	194
			H8, H10	736	267
DC 15	1/1	705	H9	768	226
			H16	888	
			H26	968	
	2/1	815	H4	768	249
			H8	888	
			H13	968	
DC 16	1/1	745	H4, H16	919	245
			H26	999	255
	2/1	850	H4, H8	919	254
			H13	999	264
DC 25	1/1	745	H4, H10	919	245
			H18	999	255
	2/1	883	H4, H5	919	254
			H9	999	264

1) Dimension C is increased by 42 mm for chain hoists with v=16/4 or v=12/3. Dimension C is increased by 111 mm for DC 5 chain hoists with v=24/6. Dimension C is increased by 131 mm for DC 10 chain hoists with v=24/6.

2) < 170 mm flange width a2 = 105 mm. ≥ 170 mm flange width a2 = 140 mm.

3.3.4.2 RKDDC / EKDDC low-headroom travelling hoist

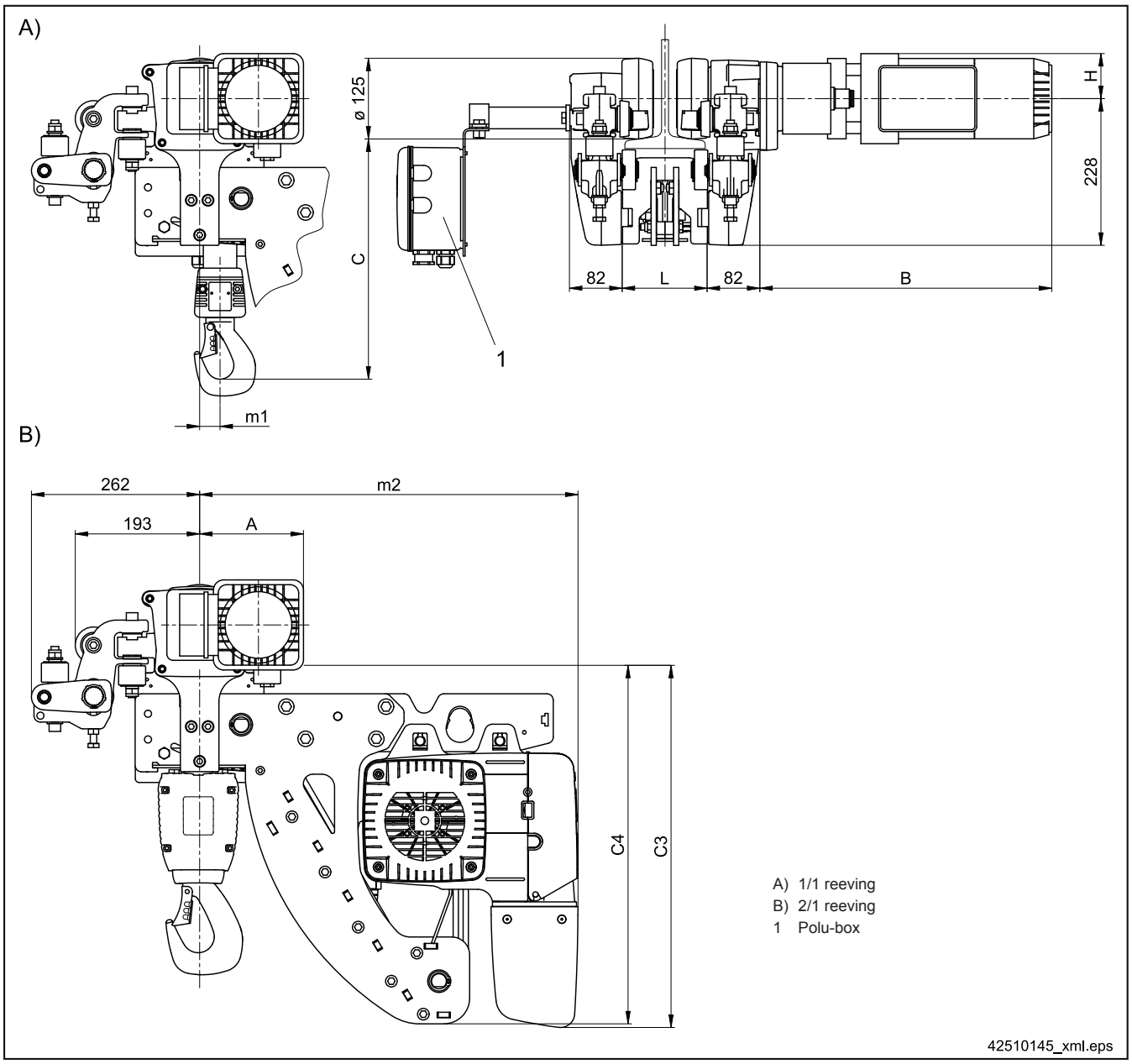

Chain hoist [1]	C for reeving 1/1	C for reeving 2/1	Hook path	C3	C4	m1 for reeving 1/1	m1 for reeving 2/1	m2 for reeving 1/1	m2 for reeving 2/1
KDDC 5	302	390	H5	450	430	28,5	5	485	485
			H8	480					547
			H20	491				547	-
KDDC 10	374	447	H5	563	558	32	0	588	588
			H8	652					661
			H20	667				661	-

1) For dimensions A, B and H see ‘AMK motor/gearbox combination’. For dimension L see ‘Curve radii’.

3.3.6 Travel drives

AMK motor/gearbox combination

<table>
<tr><th rowspan="2">Load capacity
[kg]</th><th rowspan="2">Chain hoist
DC</th><th rowspan="2">Reeving</th><th colspan="4">Travel drive for possible cross-travel speeds in approx. ... m/min 1)</th></tr>
<tr><th>V12,5/3,15</th><th>V20/5</th><th>V31,5/8</th><th>V40/10</th></tr>
<tr><td>≤ 1000</td><td>1 - 15</td><td>1/1</td><td rowspan="9">ZBF 63 A 8/2
40% CDF 0,06/0,25 kW
AMK20TD i=88,5</td><td rowspan="5">ZBF 63 A 8/2
40% CDF 0,06/0,25 kW
AMK10DD i=52,5</td><td rowspan="3">ZBF 63 A 8/2
40% CDF 0,06/0,25 kW
AMK10DD i=35,0</td><td>ZBF 63 A 8/2
40% CDF 0,06/0,25 kW
AMK10DD i=28,3</td></tr>
<tr><td rowspan="3">1250</td><td rowspan="2">10</td><td>1/1</td><td rowspan="4">ZBF 71 A 8/2
40% CDF 0,09/0,34 kW
AMK10DD i=28,3</td></tr>
<tr><td>2/1</td></tr>
<tr><td>15, 16</td><td>1/1</td></tr>
<tr><td rowspan="2">1600</td><td>10</td><td>2/1</td><td rowspan="3">ZBF 71 A 8/2
40% CDF 0,09/0,34 kW
AMK10DD i=35,0</td></tr>
<tr><td>15, 16</td><td>1/1</td></tr>
<tr><td rowspan="2">2000</td><td>10, 15</td><td>2/1</td><td rowspan="5">ZBF 80 A 8/2
40% CDF 0,13/0,5 kW
AMK10DD i=28,3</td></tr>
<tr><td>25</td><td>1/1</td></tr>
<tr><td rowspan="3">2500</td><td>10</td><td rowspan="2">2/1</td><td rowspan="4">ZBF 71 A 8/2
40% CDF 0,09/0,34 kW
AMK10DD i=52,5</td><td rowspan="4">ZBF 80 A 8/2
40% CDF 0,13/0,5 kW
AMK10DD i=35,0</td></tr>
<tr><td>15, 16</td></tr>
<tr><td>25</td><td>1/1</td></tr>
<tr><td>3200</td><td>15, 16</td><td rowspan="3">2/1</td><td rowspan="3">ZBF 90 B 8/2
40% CDF 0,2/0,8 kW
AMK20DD i=28,0</td></tr>
<tr><td>4000</td><td rowspan="2">25</td><td rowspan="2">ZBF 71 A 8/2
40% CDF 0,09/0,34 kW
AMK20TD i=88,5</td><td rowspan="2">ZBF 80 A 8/2
40% CDF 0,13/0,5 kW
AMK10DD i=52,5</td><td rowspan="2">ZBF 90 B 8/2
40% CDF 0,2/0,8 kW
AMK30DD i=36,1</td></tr>
<tr><td>5000</td></tr>
</table>

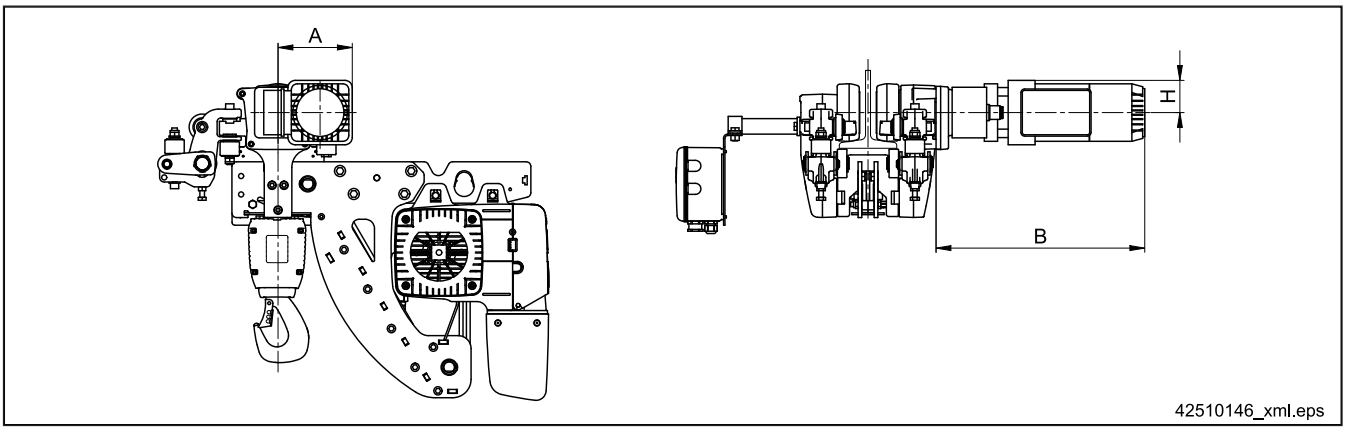

Motor/gearbox combination	A [mm]	B [mm]	H [mm]	Weight [kg]
AMK10DD ZBF63A	161,5	457	70	16
AMK10DD ZBF71A				
AMK10DD ZBF80A	170	513	78,5	23
AMK20TD ZBF63A	174	468	70	18
AMK20TD ZBF71A				19
AMK20DD ZBF90B	202	568	98	34
AMK30DD ZBF90B	227,5	576		37

Model

 1) see section 2.13

WUK motor/gearbox combination

<table>
<tr><th rowspan="2">Load capacity [kg]</th><th rowspan="2">Chain hoist DC</th><th rowspan="2">Reeving</th><th colspan="4">Travel drive for possible cross-travel speeds in approx. ... m/min 1)</th></tr>
<tr><th>V12,5/3,15</th><th>V20/5</th><th>V31,5/8</th><th>V40/10</th></tr>
<tr><td>≤ 1000</td><td>1 - 15</td><td>1/1</td><td rowspan="9">ZBF 63 A 8/2
40% CDF 0,06/0,25 kW
WUK20DD i=90,1</td><td rowspan="5">ZBF 63 A 8/2
40% CDF 0,06/0,25 kW
WUK10DD i=50,2</td><td rowspan="3">ZBF 63 A 8/2
40% CDF 0,06/0,25 kW
WUK10DD i=35,3</td><td>ZBF 63 A 8/2
40% CDF 0,06/0,25 kW
WUK10DD i=27,5</td></tr>
<tr><td rowspan="2">1250</td><td rowspan="2">10</td><td>1/1</td><td rowspan="4">ZBF 71 A 8/2
40% CDF 0,09/0,34 kW
WUK10DD i=27,5</td></tr>
<tr><td>2/1</td></tr>
<tr><td>15, 16</td><td>1/1</td><td rowspan="3">ZBF 71 A 8/2
40% CDF 0,09/0,34 kW
WUK10DD i=35,3</td></tr>
<tr><td rowspan="2">1600</td><td>10</td><td>2/1</td></tr>
<tr><td>15, 16</td><td>1/1</td></tr>
<tr><td rowspan="2">2000</td><td>10, 15</td><td>2/1</td><td rowspan="4">ZBF 80 A 8/2
40% CDF 0,13/0,5 kW
WUK10DD i=27,5</td></tr>
<tr><td>25</td><td>1/1</td></tr>
<tr><td rowspan="3">2500</td><td>10</td><td rowspan="2">2/1</td><td rowspan="3">ZBF 71 A 8/2
40% CDF 0,09/0,34 kW
WUK10DD i=56,2</td><td rowspan="3">ZBF 80 A 8/2
40% CDF 0,13/0,5 kW
WUK10DD i=35,3</td></tr>
<tr><td>15, 16</td></tr>
<tr><td>25</td><td>1/1</td></tr>
<tr><td>3200</td><td>15, 16</td><td rowspan="3">2/1</td><td rowspan="3">ZBF 90 B 8/2
40% CDF 0,2/0,8 kW
WUK20DD i=27,9</td></tr>
<tr><td>4000</td><td rowspan="2">25</td><td rowspan="2">ZBF 71 A 8/2
40% CDF 0,09/0,34 kW
WUK20DD i=90,1</td><td rowspan="2">ZBF 80 A 8/2
40% CDF 0,13/0,5 kW
WUK10DD i=56,2</td><td rowspan="2">ZBF 90 B 8/2
40% CDF 0,2/0,8 kW
WUK20DD i=34,2</td></tr>
<tr><td>5000</td></tr>
</table>

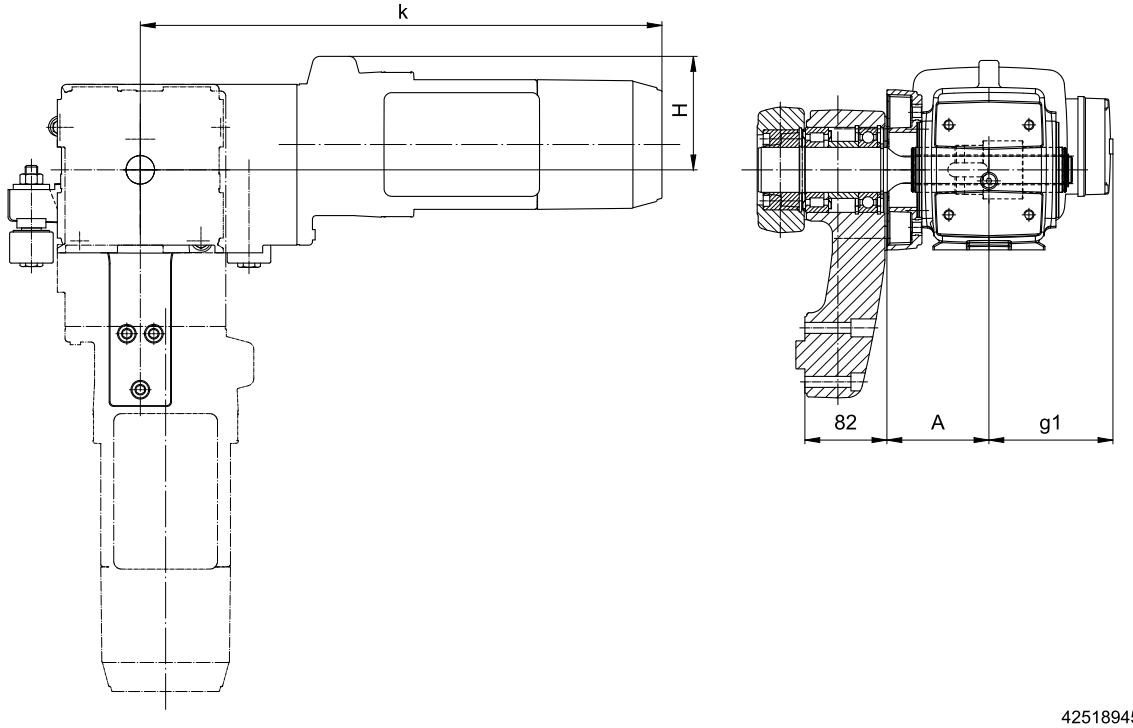

42518945_xml.eps

Motor/gearbox combination	A [mm]	g1 [mm]	k [mm]	H [mm]	Weight [kg]
WUK10DD ZBF63A	95,5	124	488	83,5	18
WUK10DD ZBF71A					
WUK10DD ZBF80A		134	544		24
WUK20DD ZBF63A	105	124	566	70	21
WUK20DD ZBF71A					22
WUK20DD ZBF90B		150	605	98	37

Model

1) see section 2.13

3.3.7 Curve radii

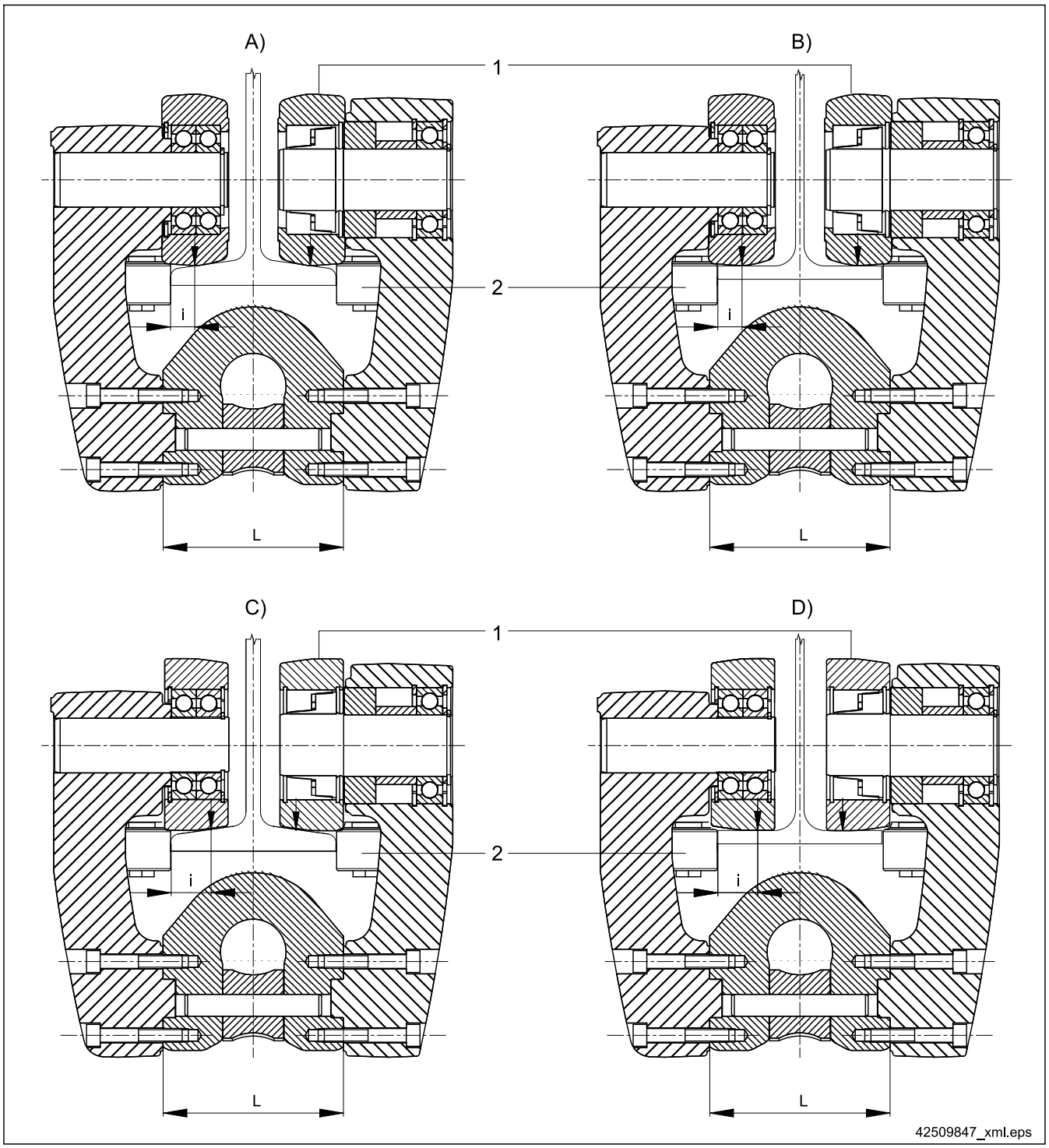

A)	Combined travel wheel for medium to large flange widths, sloping flange 1	1	Travel wheel 125 mm dia. (drive side)
B)	Combined travel wheel for medium to large flange widths, parallel flange 2	2	Guide roller 42 mm dia.
C)	Adjustable travel wheel for small flange widths, sloping flange i	i	Wheel support point (value for static calculation)
D)	Adjustable travel wheel for small flange widths, parallel flange L	L	Length of bearing support in mm

I-beam with sloping flanges INP [1]																		
I-beam	180 [2]	200 [2]	220 [2]	240 [2]	260 [2]	280 [2]	300 [2]	320	340	360	380	400	425	450	475	500	550	600
Flange width	82	90	98	106	113	119	125	131	137	143	149	155	163	170	178	185	200	215
Rmin	1000	800	800	800	800	800	800	800	800	800	800	800	800	800	800	900	900	900
L	121	125	132	132	132	132	132	128	132	132	132	132	132	136	144	151	165	180
i	16	18	19,5	22,5	26	29	32	26,5	27,5	30,5	33,5	36,5	40,5	42	42	42	42,5	42,5

Centre width I-beam IPE [1]														
I-beam	160 [2]	180 [2]	200 [2]	220 [2]	240	270	300	330	360	400	450	500	550	600
Flange width	82	91	100	110	120	135	150	160	170	180	190	200	210	220
Rmin	800	800	800	800	800	800	800	800	800	800	900	900	900	900
L	124	124	128	132	125	132	132	132	136	146	155	165	175	185
i	14,5	19	21,5	24,5	22,5	26,5	34	39	42	42	42,5	42,5	42,5	42,5

Width I-beam HE-A (HE-B) [1]								
I-beam	160	180	200	220	240	260	280	300-1000 (300-600)
Flange width	160	180	200	220	240	260	280	300
Rmin	800	800	900	900	900	1000	1000	1000
L	132	146	165	185	204	224	243	263
i	42	42	42,5	42,5	43	43	43,5	43,5

Width I-beam HE-M [1]							
I-beam	160	180	200	220	240	260	280
Flange width	166	186	206	226	248	268	288
Rmin	800	900	900	900	1000	1000	1000
L	132	152	171	190	212	232	251
i	42	42	42,5	43	43	43	43,5

3.3.8 Track girder

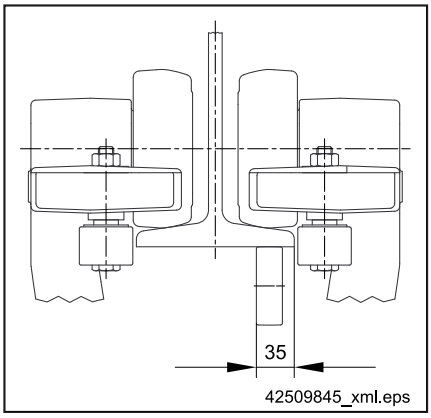

Shape of the track girder

Do not exceed permissible deviations in dimension and shape of the track girder according to DIN EN 10034. Track joints must be clean and smooth, also below the track to a distance of 35 mm from the outer edge of the flange. Bolted joints must be outside the travel area of the travel wheels (observe maximum web thickness).

Material of the track girder

We recommend the use of at least S355J2G3 material, since track wear is ten times higher when S235JRG2 is used.

Track girders with sloping flanges

The load on the inner travel wheel is reduced if the trolley is used on tracks with sloping flanges. If this wheel is driven, it may start to slip under unfavourable circumstances. This effect increases with decreasing curve radii.

Curve radii

In the interest of good travel characteristics, we recommend the use of much larger curve radii. Wear of the travel wheels depends greatly on the curve radius. The forces required to move the load may strongly increase in the case of small curve radii in connection with high loads.

1) Normal type with combined travel wheel, type with adjustable travel wheel possible on request.
2) With adjustable travel wheel only.

3.4 DC-Wind

For further information, please refer to the 'DC-Wind chain hoist operating instructions', table page 17.

3.4.1 Selection table

Load capacity [kg]	Chain hoist Type	Hoist speed at 50 Hz [m/min]	Hook path H [m]	Trolleys with frame	Chain Dimensions [mm]	Max. weight without chain RUDC [kg]	Max. weight without chain Stationary [kg]	Chain weight per metre [kg]
125	DC-Wind 2	16/4	≤ 120	2 x RU 3/2	4,2 x 12,2	28	20	0,38
	DC-Wind 5	24/6				33	26	
250		16/4						
	DC-Wind 10	24/6	≤ 180	2 x RU 6/2	5,3 x 15,2	59	45	0,62
500	DC-Wind 5	12/3	≤ 120	2 x RU 3/2		43	36	
	DC-Wind 10	12/3		2 x RU 6/2		59	45	
		24/6	≤ 180					
800		18/4,5	≤ 150	2 x U11	7,4 x 21,2	84	64	1,20
1000			≤ 120					
		12/3						
1200	DC-Wind 15	16/4	≤ 150		8,7 x 24,2	155	125	1,67
1500		12/3	≤ 120					

3.4.2 Properties

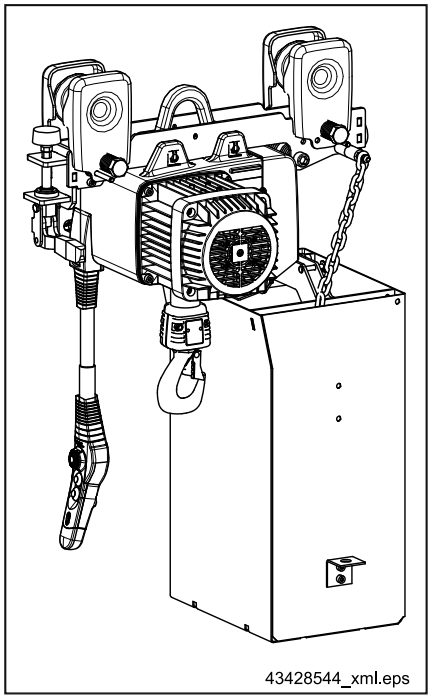

DC-Wind hoists are suitable for application as hoisting equipment for maintenance work in wind turbine installations. They have the following characteristics:

- Suitable for high installations, too, with lifting heights of up to 180 m;
- Load capacities of up to 1500 kg, also for handling larger components;
- High lifting speeds of up to 24/6 m/min for quick handling of the loads. Hoist motors with up to 100 % duty factor;
- Stationary or mobile installation;
- Trolley as low-headroom model with locking device;
- Chain collector box for various mounting positions;
- Special equipment for offshore applications, high installation heights, cold-climate versions or special corrosion protection requirements is available.

20352544.indd/180713

4 Accessories

4.1 Mechanical options

4.1.1 Chain hoists with horizontal chain lead-off

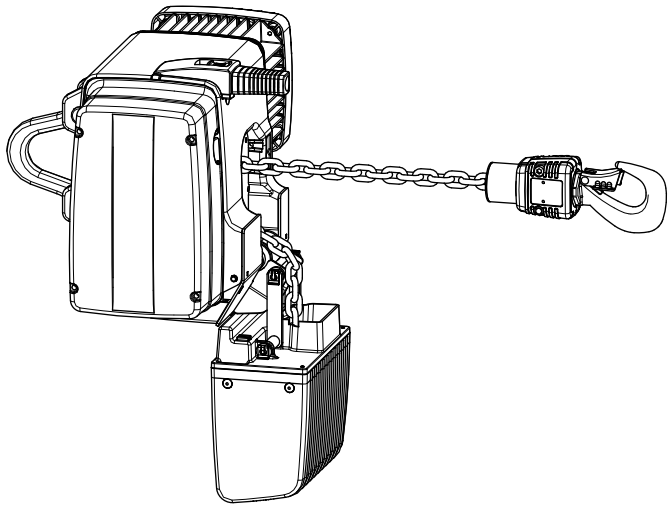

43431344.eps

Use

For inclined / horizontal chain lead-off, e.g. for stationary opening of covers or horizontal lead-off, the DC-Pro 5 - 10 chain hoist may be used.

Properties

The DC chain hoist is available with slewing or rigid chain collector box fitting; slewing range 0° - 90°. The standard plastic chain collector box or the flexible chain collector can be fitted.

Depending on the application, contact the manufacturer regarding the oil quantity in the gearbox, frequency of use and chain wear.

The return assembly available as a separate component is suitable as an additional chain return arrangement.

For further information, see section ‘Chain return arrangement’.

4.1.2 Foot-mounted hoist, fitting from below

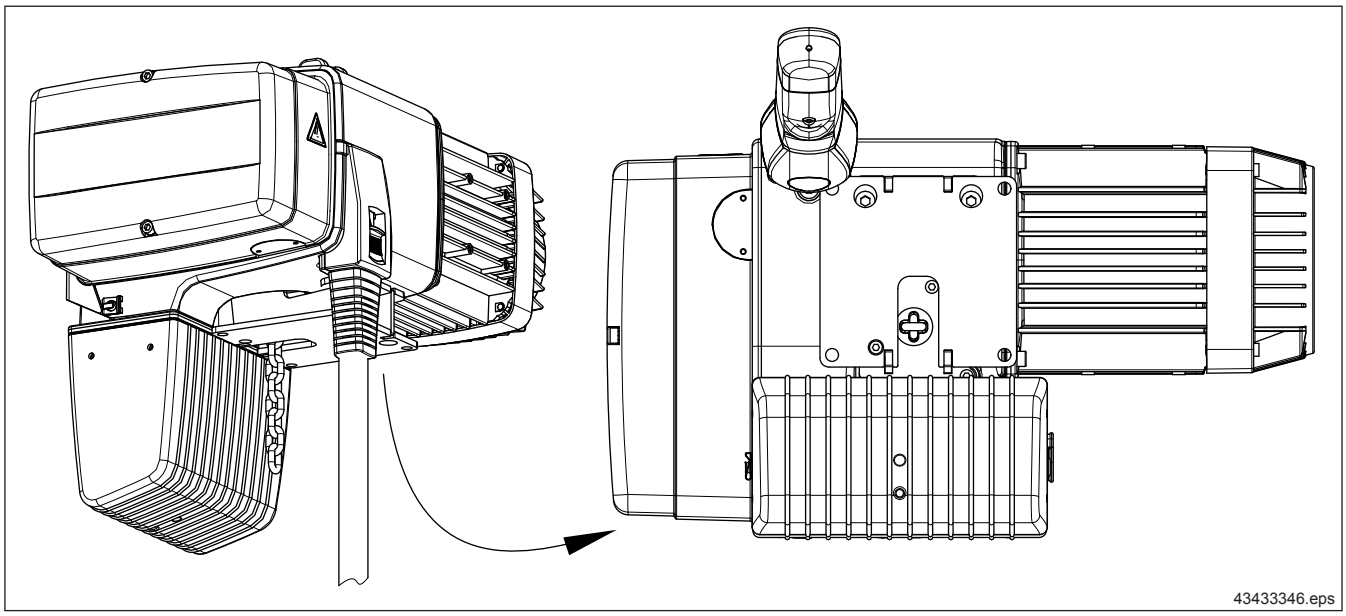

Use

Depending on the application, the chain hoist may be fitted with a foot-mounting arrangement instead of fastening with the suspension bracket. This includes e.g. fitting on telescoping lifting masts or pivot arms.

The chain lead-off then is vertical. Horizontal lead-off is possible by an additional chain return arrangement fitted downstream which is available as an option.

Properties

The chain hoist is exclusively fastened by means of the foot-mounting arrangement. This socket is bolted below the chain hoist on the guide plate and in addition on the chain hoist housing.

The foot-mounting arrangement is available for size DC 5.

The return assembly available as a separate component is suitable as an additional chain return arrangement.

For further information, see section ‘Chain return arrangement’.

4.1.3 Chain return arrangement

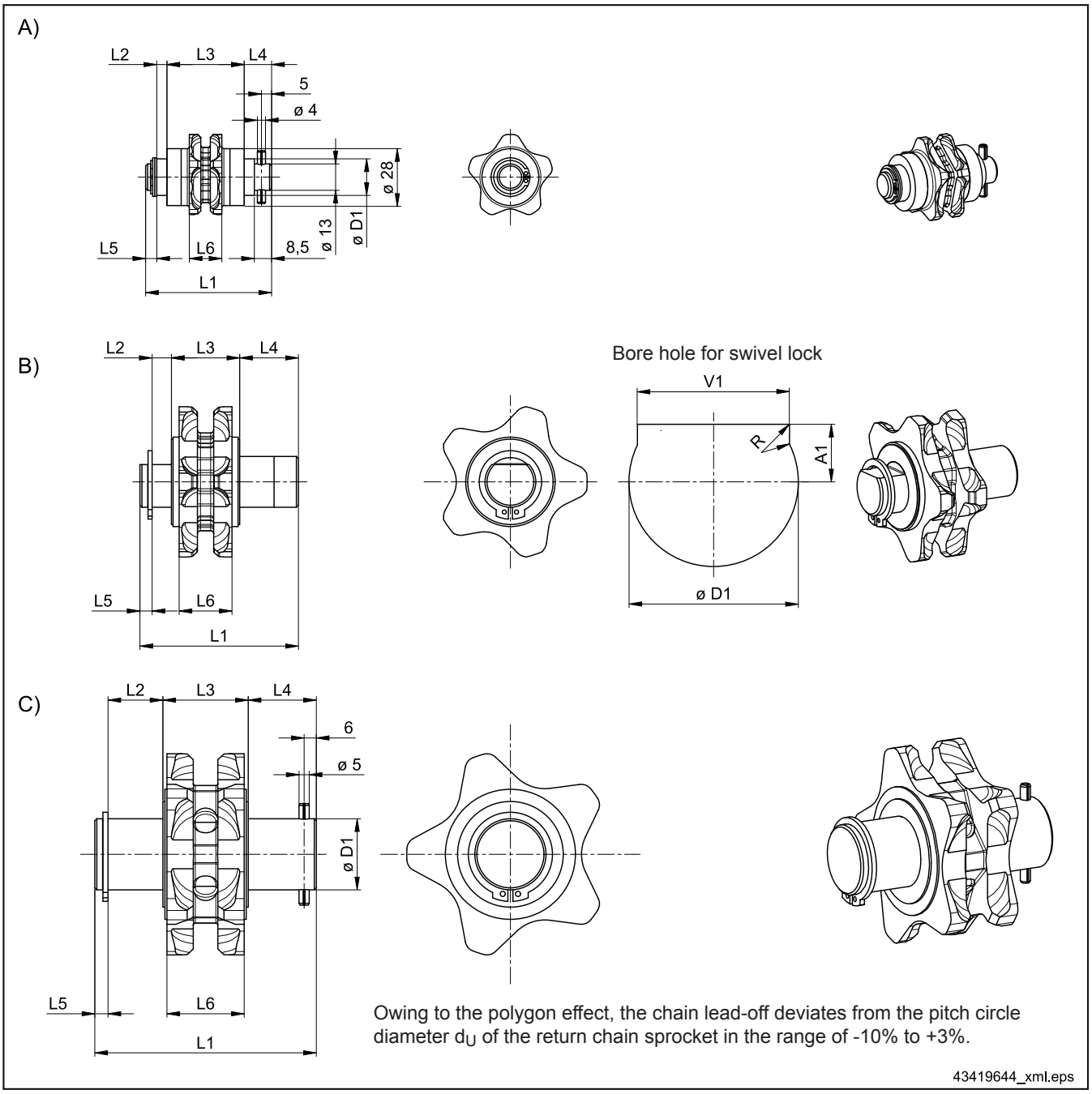

Item	Designation	Size	A1 [mm]	dia. d_U [mm]	dia. D1 [mm]	L1 [mm]	L2 [mm]	L3 [mm]	L4 [mm]	L5 [mm]	L6 [mm]	R [mm]	V1 [mm]	Part no.
A)	Chain return arrangement kit	DC 1/2	-	38,8	$18^{+0,2}/_{+0,1}$	62	5	38	13,5	5,5	16	-	-	717 808 45
B)		DC 5	$6,1^{+0,3}$	48,4	$18^{+0,2}/_{+0,1}$	56	7	26	16,5	6,5	20	0,5	15,5	718 808 45
		DC 10	$8,5^{+0,2}$	67,5	$25^{+0,2}/_{+0,1}$	78	9,5	33,6	28,9	6	26	1,0	$22,5^{+0,2}$	715 808 45
C)	Accessories chain return sprocket	DC 15 / 16	-	77,0	$25^{+0,3}$	78	16,5	33	22,5	6	31	-	-	721 845 45
		DC 25	-	89,8	$35^{+0,3}$	109	27	42	33,5	6,5	40	-	-	721 850 45

Chain return sprocket for fitting by the customer, see also section ‘Chain hoists with horizontal chain lead-off’.

All pins must be secured against twisting.

4.1.4 Friction force checking device

Designation	Chain hoist size	Part no.	Weight [kg]
Case with display unit / measuring sensor / adapter	DC-Pro 1-25, DCM-Pro 1-5, DC-Com 1-10, DC-Wind 2-10, DCS-Pro 1-10, DCMS-Pro 1-2, DCRS-Pro 1-2 DKUN 1-20, DKM 1-2, PKV 1, PK 2-10, PMV 5-12	836 708 44	5,8

The friction force checking device is supplied in a specially designed case.

The display unit indicates the force measured by the measuring sensor in t, the lowest display value is 0,01 t.

The display unit is powered by a battery. The electronic circuit performs the following functions:

- supplies the measuring sensor with regulated voltage,
- converts the measuring sensor signal into a display value,
- monitors the 9 V battery; when the battery voltage drops below 8 V, the display switches to ‘Lo Batt’.

For further information, please refer to the ‘Friction force checking device assembly instructions’, table page 17.

4.1.5 Hook accessories

Twist adapter for hook assembly / bottom block

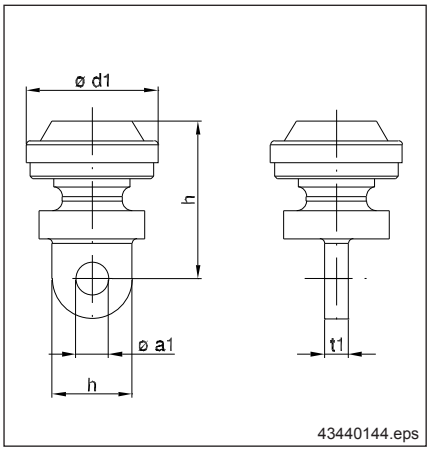

Chain hoist size	Designation	dia. a1 [mm]	b1 [mm]	dia. d1 [mm]	h [mm]	t1 [mm]	Part no.	Weight [kg]
DC 1 - 2	Twist adapter	8,2	20	33	39,5	6	On request	-
DC 5				40	47			
DC 10 1/1		9,8	25	52	60,7	8		
DC 10 2/1 DC 15 - 25 1/1		12,2	32	64	77,5	10,3		
DC 15 - 25 2/1		16,2	41	81	91,5	13,2		

The twist adapter for hook assembly / bottom block is used for load handling attachments with load eye connection.

For size DC 10 2/1 chain hoists, the DK bottom block with separate cut-off springs must be used.

Safety hook

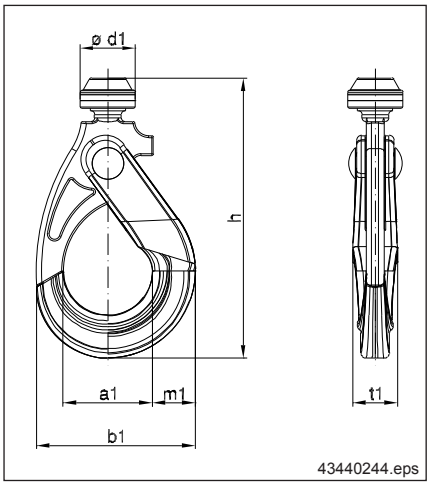

Chain hoist size	Designation	a1 [mm]	b1 [mm]	dia. d1 [mm]	h [mm]	m1 [mm]	t1 [mm]	Part no.	Weight [kg]
DC 1 - 2	Safety hook	50	89	31	157	24	25	716 450 45	0,825
DC 5				39	164			716 451 45	0,892
DC 10 1/1				50	173			716 452 45	1,030
DC 15 - 25 1/1		60	115	62	220	32	28	716 453 45	2,130

If the load hook makes contact when a load is suspended, the safety hook prevents the hook from opening.

The safety hook cannot be fitted in a DC-Com 1/1 hook assembly, in such a case, the DC-Pro hook assembly must be used.

For size DC 10 2/1 chain hoists, the DK bottom block with separate cut-off springs must be used.

Safety hooks must not be used under alkaline or acidic conditions.

Direct application in galvanising facilities is prohibited.

For further information, please refer to the 'DC 1 - 25 safety hook assembly instructions', table page 17.

4.1.6 Canopy

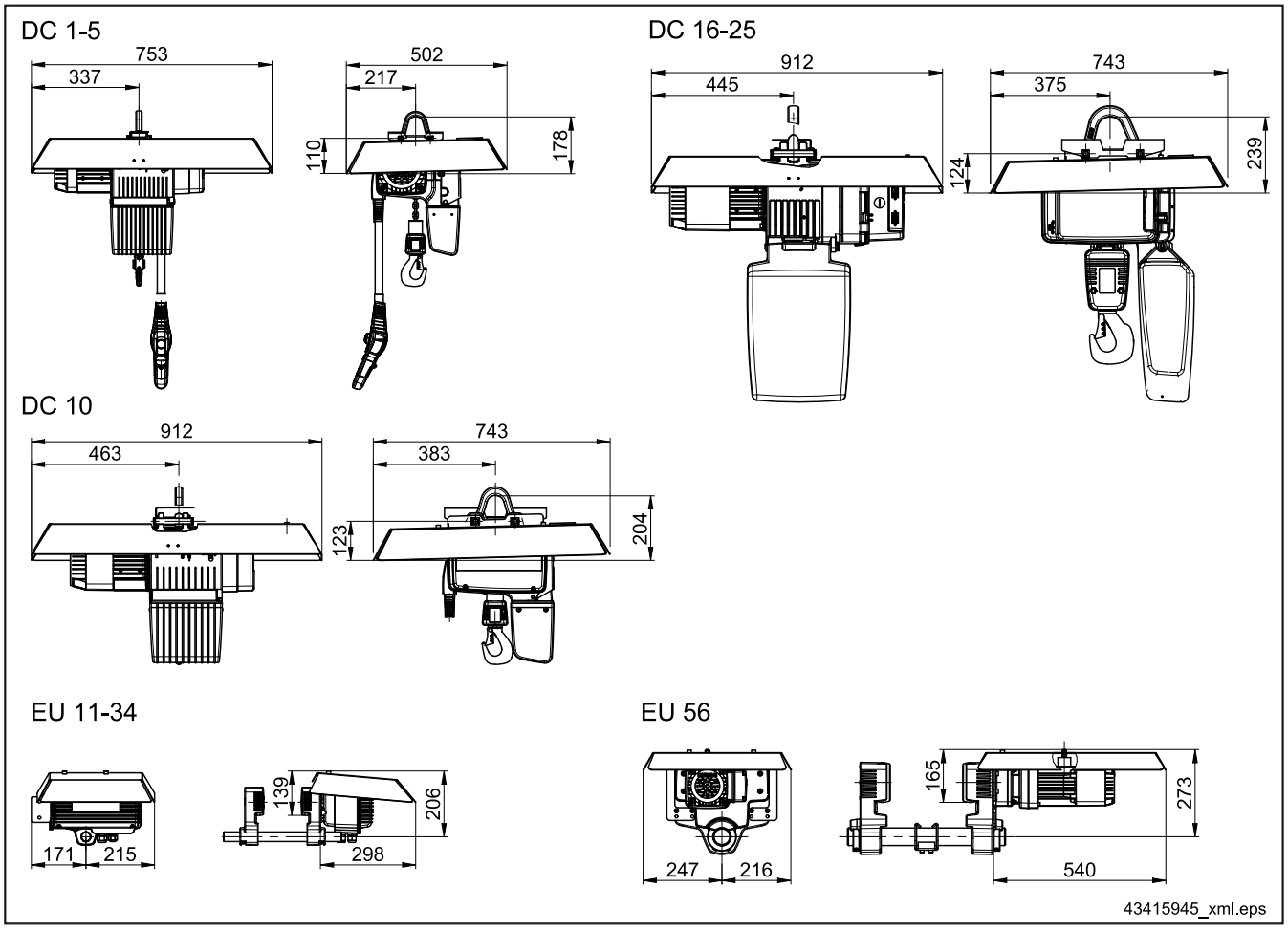

Designation	Chain hoist size	Part no.	Weight [kg]
Canopy for chain hoist	DC 1-5	718 975 45	6,5
	DC 10	715 975 45	15,1
	DC 16-25	721 975 45	15,1
Canopy for trolley	EU11-34	716 775 45	3,4
	EU56	749 047 46	6,0

Demag chain hoists, trolleys and travel drives operating outdoors should generally be provided with a direct cover for protection against the weather or they should be travelled under shelter if they are not used.

(Material: sheet metal plate, colour: black)

The following additional fittings are possible:

- Chain collector suspended from trolley,
- DCS chain hoist,
- In principle, only long suspension bracket.

On the service cover side:

- Harting plug - mains,
- Geared limit switch,
- Electrical boxes, DRC-DC.

The following combinations are **not** possible:

- KDC,
- Counterweight for DC 1-25,
- DRC-MP radio control fitting,
- Enclosure fitting on the suspension eyes.

On the control pendant side:

- Harting plug - mains,
- Electrical boxes.

4.1.7 Protective plates

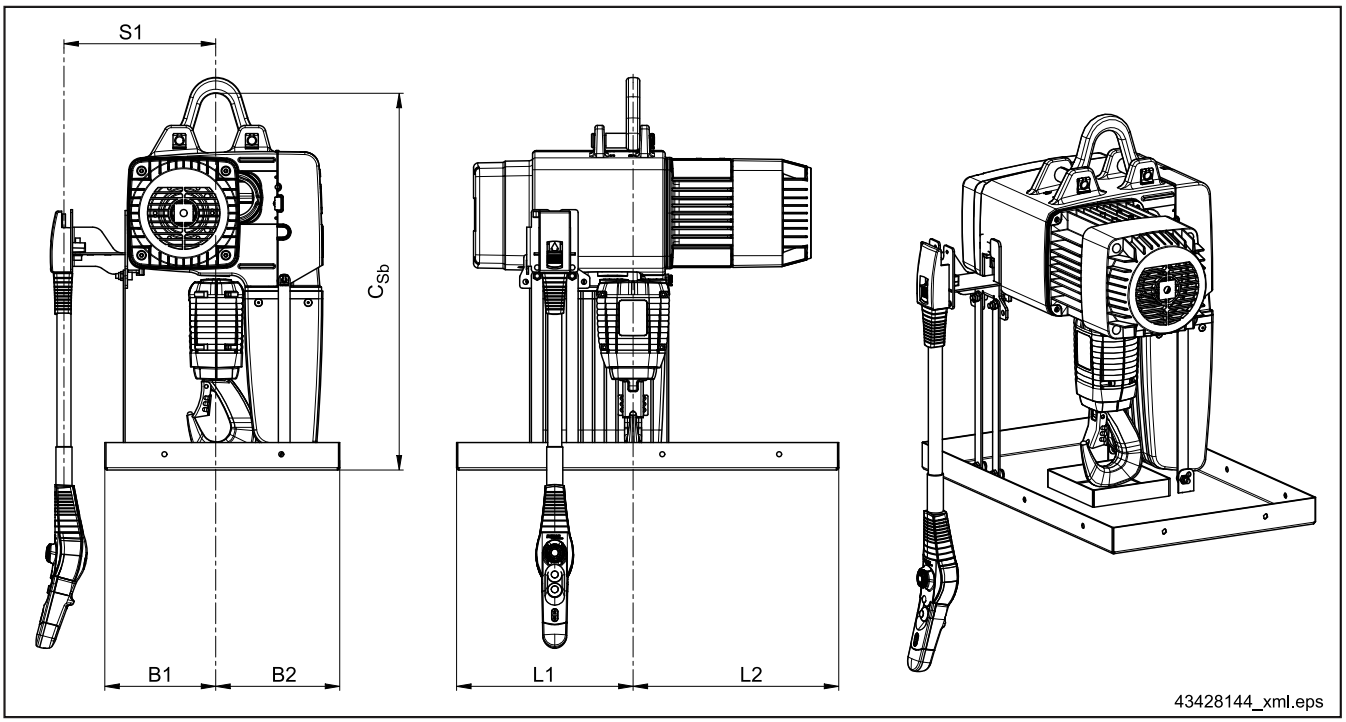

Chain hoist size	Reeving	C_{Sb} [mm]	B1 [mm]	B2 [mm]	S1 [mm]	L1 [mm]	L2 [mm]	Oil collector tray Part no.	Weight [kg]	Heat protection shield including sheet metal chain collector box Part no.	Weight [kg]
DC 1 - 2	1/1	459	160	142	225	222	282	749 209 46	6,0	749 394 46	10,0
DC 5		497			233			749 210 46		749 395 46	10,2
DC 10	1/1, 2/1	645	190	212	260	302	352	749 211 46	7,0	749 396 46	12,8
DC 16 - 25	1/1	903	277	275	330	402	402	749 762 46	10,0	750 333 46	20,5
	2/1		268	284	321						

The **oil collector tray** e.g. for use in clean-room applications includes:

- Base tray with connecting plates for fastening on the chain hoist and short jib for fitting the control pendant.
- Max. possible chain collector size is H8 of standard plastic design.

A **heat protection shield** incl. sheet metal chain collector box for protecting the chain hoist against radiant heat includes:

- Base tray including heat shield plate (6 mm) with connecting plates for fastening on the chain hoist and short jib for fitting the control pendant.
- In addition, including sheet metal chain collector box.

4.1.8 Trolley buffers

U / EU11 - EU34

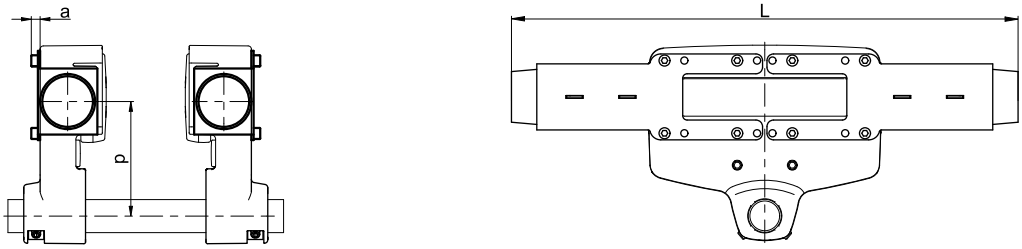

RU / EU56

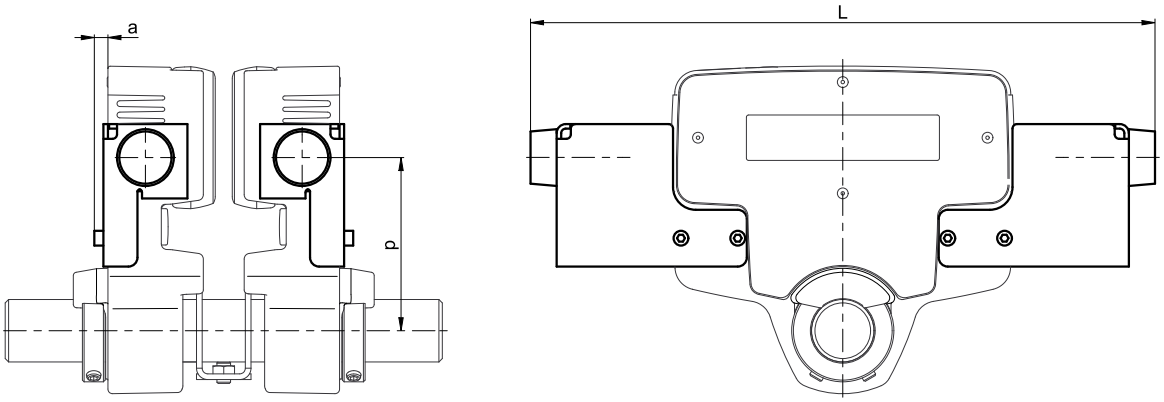

42699950.eps

If several trolleys are operated on one girder, we recommend the use of trolley buffers to dampen any collisions between the trolleys.

Designation	Dimension [mm]			Part no.	Weight [kg]
	a	L	p		
U11/22/34 buffer kit	8	460	108	716 766 45	1,4
	8	500	140		
RU / EU56 buffer kit	12	550	153	716 862 45	2,3

4.1.9 Supporting roller fittings

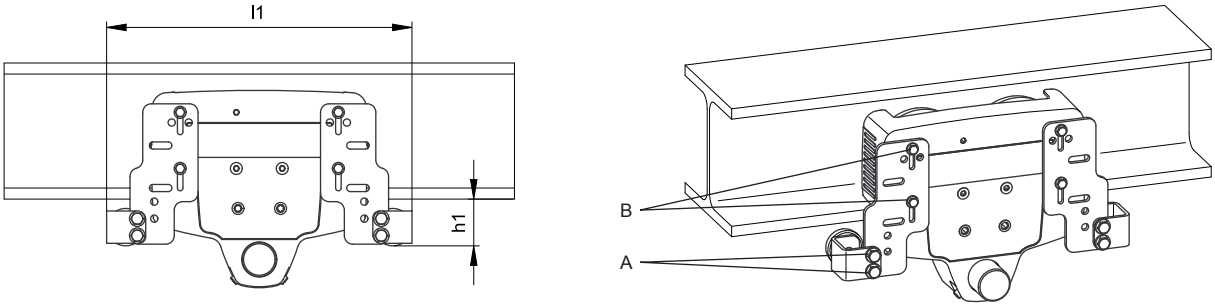

42736244.eps

In various cases, it is necessary to fit supporting rollers to the trolleys.

Trolley	l1 [mm]	h1 [mm]	Tightening torque A [Nm]	Tightening torque B [Nm]	Part no.	Weight [kg]
U11 / EU11	315	68	42	12	716 670 45	1,4
U22 / EU22	359	55				
U34 / EU34						
RU56 / EU56	411	61,5		20		

4.1.10 Track end buffers

Use

We recommend that track ends be provided with elastic buffers and that our KP-A and KP-T clamp-fitted buffers are used:

Properties

- Easy assembly;
- for sloping and parallel flanges;
- for various trolleys, from CF 5 clickfit trolleys to U11 and RU56 trolleys;
- tightening torques for assembly cast into clamp-type buffer;
- buffers can be easily replaced;
- operating temperature range: from -20°C to +70°C;
- sufficient resistance to ageing, ozone and weather;
- resistant to acids and lyes;
- not suitable for chain hoists with suspension and supporting roller for chain collector;
- not suitable for articulated trolleys.

General operating conditions

Buffer size	KP-A10				KP-T16			
Flange thickness	max. 21 mm				max. 31 mm			
Flange width	50 mm to 314 mm				82 mm to 305 mm			
Smallest DIN girder profile section	INP 100	IPE 100	IPB 120	IPBL 120	INP 180	IPE 180	IPB 180	IPBL 180
Largest DIN girder profile sections	INP 300	IPE 600	IPB 320	IPBL 450	INP 500	IPE 600	IPB 650	IPBL 1000
Travel wheel diameter	56 mm to 80 mm				80 mm to 125 mm			

KP-A10 (KP-T16) clamp-fitted buffer

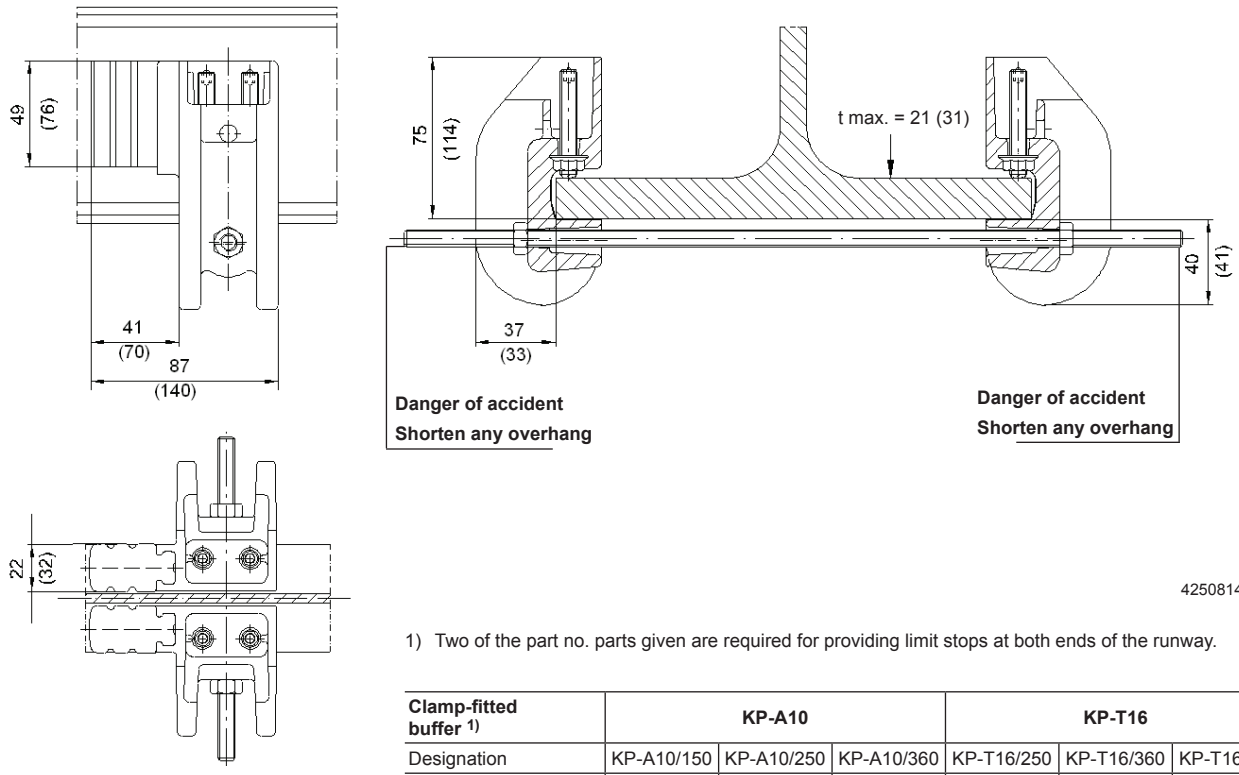

42508146.jpg

1) Two of the part no. parts given are required for providing limit stops at both ends of the runway.

Clamp-fitted buffer 1)	**KP-A10**			**KP-T16**		
Designation	KP-A10/150	KP-A10/250	KP-A10/360	KP-T16/250	KP-T16/360	KP-T16/420
Part no.	826 924 44	826 926 44	826 928 44	826 982 44	826 984 44	826 986 44
Flange width [mm]	50 - 104	105 - 204	205 - 314	82 - 195	196 - 305	306 - 420

For further information, please refer to the 'Clamp-fitted buffer technical data', table page 17.

4.1.11 Link bar

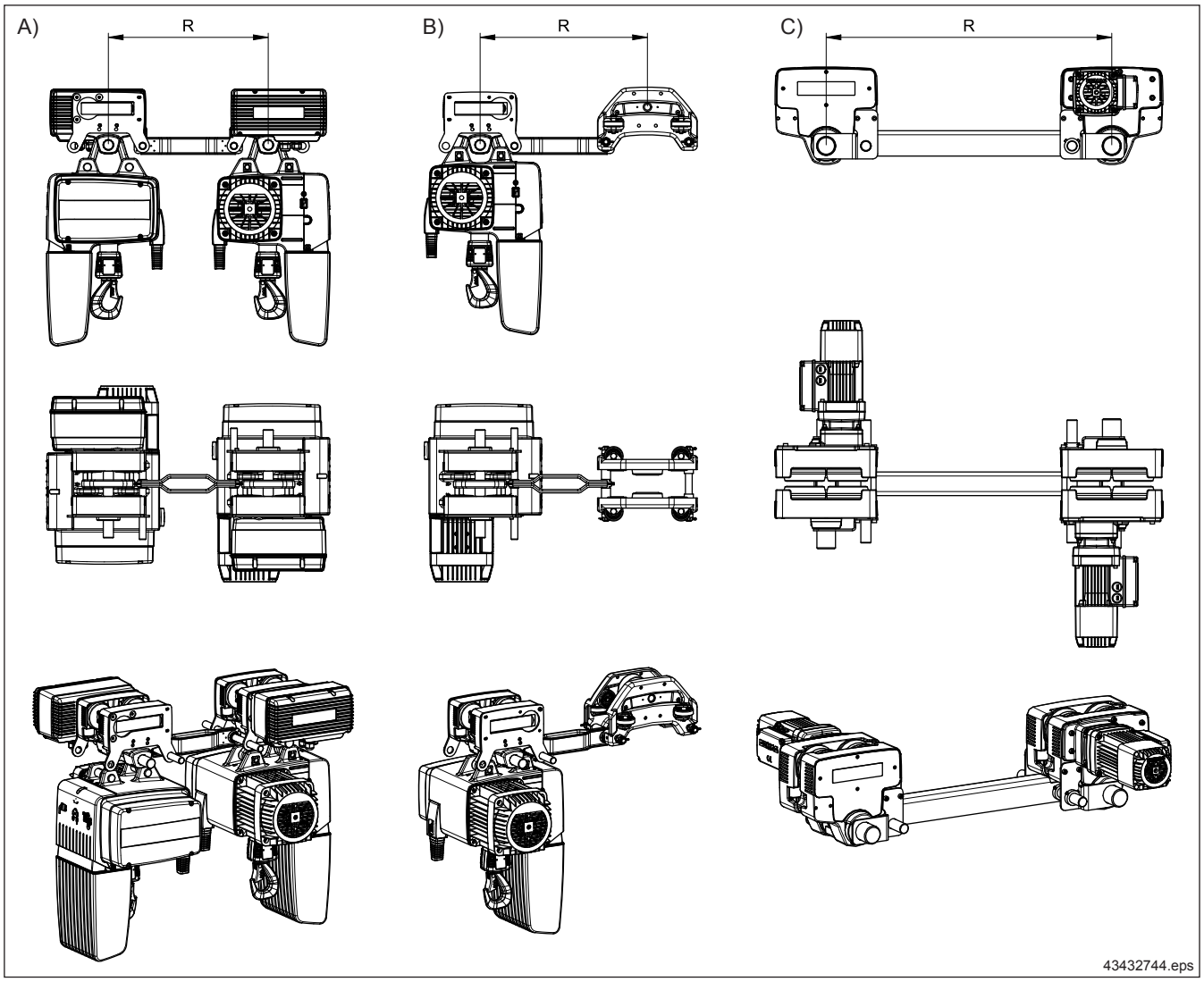

Item	Designation		Crossbar distance R [mm]	Part no.
A)	Coupling set trolley combination	U11 ➔ U11	350 - 3000	747 670 46
		U22 / U34 ➔ U22 / U34	410 - 3000	749 279 46
C)		U56 ➔ U56	600 - 3000	749 772 46
B)		U11 ➔ DRF 200	330 - 1500	747 604 46
		U22 / U34 ➔ DRF 200	410 - 3000	749 468 46
Not shown		U56 ➔ DRF 200		750 430 46

If two chain hoists are controlled from a common control position via coupled trolleys, a risk analysis must be carried out and it must be clarified whether this application is covered by the new tandem directive.

DC chain hoists coupled to DRF 200 friction wheel travel drives can be used e.g. for poor track conditions, wet and dirty tracks, inclined travel, special speeds, frequency-regulated speeds.

For further information, please refer to the 'DC 1 - 25 tandem assembly instructions', table page 17.

4.2 Chain hoists for special safety regulations

4.2.1 General

The application of a chain hoist may require compliance with special safety regulations, e.g.:

- For handling molten masses,
- For application of chain hoists when persons are present under the load according to BGV D 8 Plus or BGV C 1 regulations.

The safety regulations can be complied with by the use of e.g.:

- Additional external / customer-designed safety control system and overload cut-out,
- Profibus encoder, double brake, geared limit switch, double GF module.

4.2.2 Double brake

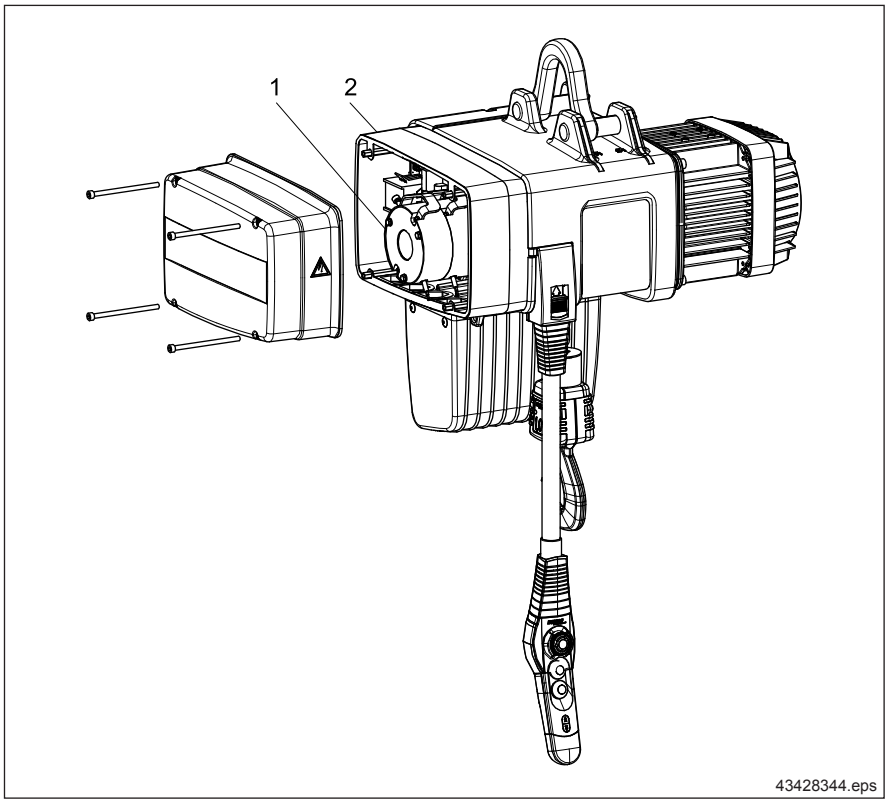

1 Double brake with manual brake release lever
2 Intermediate flange

Overall length l of the chain hoist is increased by the required intermediate flange:

- DC 5 by 110 mm,
- DC 10 by 90 mm.

For fitting a double brake in a chain hoist at a later date, please contact the manufacturer.
For further information, please refer to the 'DC double brake assembly instructions', table page 17.

4.2.3 Chain hoists for mobile entertainment systems

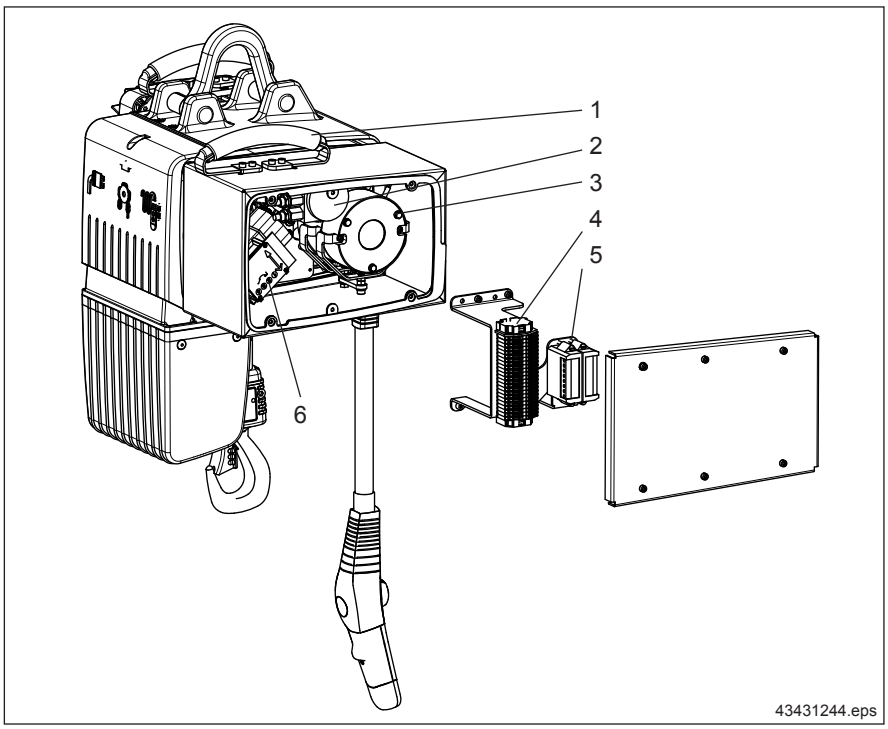

1 Handle for mobile transport
2 Profibus rotary encoder
3 Double brake
4 Terminal strip
5 Brake module
6 Geared limit switch

Application of chain hoists when persons are present under the load	**BGV D 8**	**BGV D 8** with secondary securing arrangement (additional safety rope / chain)	**BGV D 8 Plus**	**BGV C 1** (previously VBG 70)
Assembly / disassembly, setting-up operation	Not permissible	Not permissible	Not permissible	Permissible
Holding loads (no movement / standstill)	Not permissible	Permissible	Permissible	Permissible
Moving loads (lifting and lowering process)	Not permissible	Not permissible	Not permissible	Permissible
Design requirements for chain hoists				
Group of mechanisms	min. 1Bm		min. 1Bm	min. 1Bm
Dimensioning of the mechanism	Single rated load		Double rated load	Double rated load
Dimensioning of the chain for rated load	Safety factor min. 5		Safety factor min. 10	Safety factor min. 10
Slipping clutch permissible	Permissible		Not permissible (for the DC, the slipping clutch is permissible, as it is outside the transmission of power train, when the brake is applied)	Not permissible (for the DC, the slipping clutch is permissible, as it is outside the transmission of power train, when the brake is applied)
Brake	1 x		2 x	2 x
Emergency-limit switch	No		No	Yes
Operating limit switch	No		No	Yes
Overload monitoring	Slipping clutch		Switch-off (for the DC, the slipping clutch is permissible, as it is outside the transmission of power train, when the brake is applied)	Switch-off at 120% rated load
Underload monitoring	No		No	Yes (underload monitoring with group cut-out is necessary for guided loads and system loads)
Speed monitoring for regulated drives	omitted		omitted	Yes
Result	**The DC chain hoist fulfils the requirements without special measures**		**The DC chain hoist fulfils the requirements with the following measures:** Double brake 50% load capacity reduction	**The DC chain hoist only fulfils the requirements with an additional safety control system provided by the customer**

 (Source for table listing:VPLT.SR2.0 Standards for entertainment systems)

4.3.1 Braking resistor for DCS-Pro

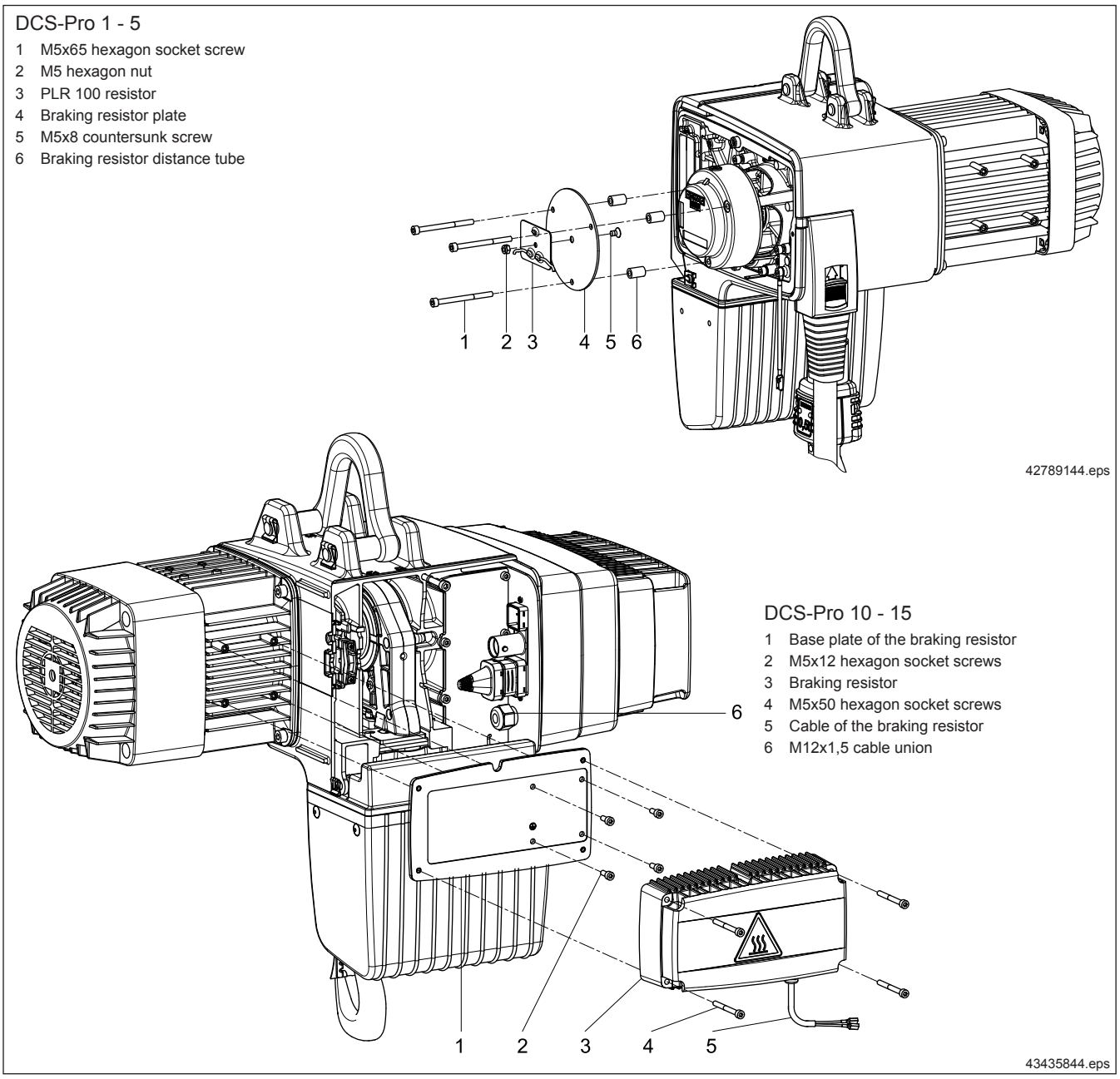

Designation	Chain hoist size	Part no.	Weight [kg]
Braking resistor set	DCS-Pro 1 - 5 (can be retrofitted from year of construction 07/2010)	718 630 45	0,26
	DCS-Pro 10 - 15	715 615 33	2,50

The chain hoist can be retrofitted with a braking resistor for increasing the deceleration and, as a result, shortening the brake path.

The braking resistor set comprises the braking resistor and in addition all components required for assembly. In the following chain hoists, the braking resistor is already included as standard:

DCS 10 1/1 VS12, DCS 10 2/1 and DCS 15.

For further information, please refer to the 'DCS-Pro braking resistor assembly instructions', table page 17.

4.3.2 Geared limit switch

For further information, please refer to the 'DC geared limit switch assembly instructions' and 'DC-Pro 16 - 25 chain hoist operating instructions ', table page 17.

DC 1 - 15	TER type BASE					Stromag LC 76					Stromag LC 180				
3 contacts	100 012 98	Hook path per revolution of the drive shaft on the geared limit switch [mm]	Hook path with actuated switching cam. No data, since the switching cam is pointed.	± Repeat accuracy [mm]	Hysteresis [mm]	-	Hook path per revolution of the drive shaft on the geared limit switch [mm]	Hook path with actuated 40° switching cam approx. [mm]	± Repeat accuracy [mm] 1)	Hysteresis [mm] 1)	-	Hook path per revolution of the drive shaft on the geared limit switch [mm]	Hook path with actuated 40° switching cam approx. [mm]	± Repeat accuracy [mm] 1)	Hysteresis [mm] 1)
4 contacts	-					150 008 98					100 015 98				
Additional 4 contacts	-					150 007 98					100 013 98				
Rated revolutions	100					76					180				
Useful revolutions	99,55					76,0					185,6				
Transmission ratio	1:100					1:85,55					1:208,77				
Chain hoist 2)	Hook path [m]					Hook path [m]					Hook path [m]				
DC 1 - 2	14,5	146,4	-	-	-	10,7	146,40	1390	10	130	26,7	146,40	3400	25	220
DC 5	8	85,5				6,3	85,50	810	6	80	15,6	85,50	1980	15	130
DC 10 1/1	11,6	119,25				8,7	119,25	1130	8	110	21,8	119,25	2770	21	180
DC 10 2/1	5,8	59,625				4,4	59,63	570	4	50	10,9	59,63	1380	10	90
DC 15 1/1	13	136,125				10,0	136,13	1290	10	120	24,8	136,13	3160	24	200
DC 15 2/1	6,5	68,063				5,0	68,06	650	5	60	12,4	68,06	1580	12	100
Double chain hoist 3)															
KLDC-D 10 1/1	11,6	119,7	-	-	-	8,8	119,70	1140	9	110	21,8	119,70	2780	21	180
KLDC-D 10 2/1	5,8	59,85				4,4	59,85	570	4	50	10,9	59,85	1390	10	90
KLDC-D 15 1/1	14	143,1				10,5	143,10	1360	10	130	26,1	143,10	3320	25	210
KLDC-D 15 2/1	7	71,55				5,2	71,55	680	5	60	13,1	71,55	1660	12	110
	Mechanical service life: 1 x 10^6 switching operations					Mechanical service life: 1 x 10^7 switching operations									
	Type of enclosure: IP 65					Type of enclosure: IP 65									
	Rated operating voltage: 250 V AC					Rated operating voltage: 230 V AC/ 60 V DC									

DC 16 - 25	Stromag range 51 type 205					Stromag range 51 type 540				
3 contacts	-	Hook path per revolution of the drive shaft on the geared limit switch [mm]	Hook path with actuated 15° switching cam approx. [mm]	± Repeat accuracy [mm] 1)	Hysteresis [mm] 1)	721 100 45	Hook path per revolution of the drive shaft on the geared limit switch [mm]	Hook path with actuated 15° switching cam approx. [mm]	± Repeat accuracy [mm] 1)	Hysteresis [mm] 1)
4 contacts	721 095 45 721 096 45					-				
Additional 4 contacts	-					-				
Rated revolutions	205					540				
Useful revolutions	206,26					541,5				
Transmission ratio	1:212,272					1:557,284				
Chain hoist 2)	Hook path [m]					Hook path [m]				
DC 16 1/1	44,0	217,80	1930	39	220	116,8	217,80	5060	101	590
DC 16 2/1	22,0	108,90	960	19	110	58,4	108,90	2530	51	290
DC 25 1/1	42,8	211,50	1870	37	220	113,4	211,50	4910	98	570
DC 25 2/1	21,4	105,75	940	19	110	56,7	105,75	2460	49	290
	Mechanical service life: 1 x 10^7 switching operations									
	Type of enclosure: IP 55 (in electric equipment cover)									
	Rated operating voltage: 24 V AC									

1) The repeat accuracy approximately corresponds to the hook path covered for a 0,2° revolution of the geared limit switch. The values of repeat accuracy and hysteresis are rounded and shown with a safety mark-up factor of 1,5.
2) The specified values do not apply to DC-Wind chain hoists.
3) The values for the double chain hoists only apply to KLDC-D models. The values of the LDC-D model correspond to those of the standard chain hoists.

20352544.indd/180713

DC 1 - 15 chain hoist

With DC 1 - 15 chain hoists, the geared limit switch enables additional cut-off points to be approached beyond the normal standard limit switch functions. The geared limit switch is available as an option. It is fitted to the outside of the chain hoist.

3 contacts

Geared limit switches with 3 contacts are supplied ready completely wired with the hoist control system and replace the standard operating limit switches in DC chain hoists. The third contact is designed for fast-to-slow switching of the lifting motion. It can be rewired for fast-to-slow switching of the lowering motion. It cannot be wired by the customer. The fast-to-slow limit switch function is not available for DCS units with infinitely variable hoist speed.

4 / 8 contacts

Geared limit switches with 4 or 8 contacts are provided for wiring in installations by the customer. The standard operating limit switches of the DC chain hoist therefore remain active.

The geared limit switch is delivered without wiring to the hoist control system.

Dimensions

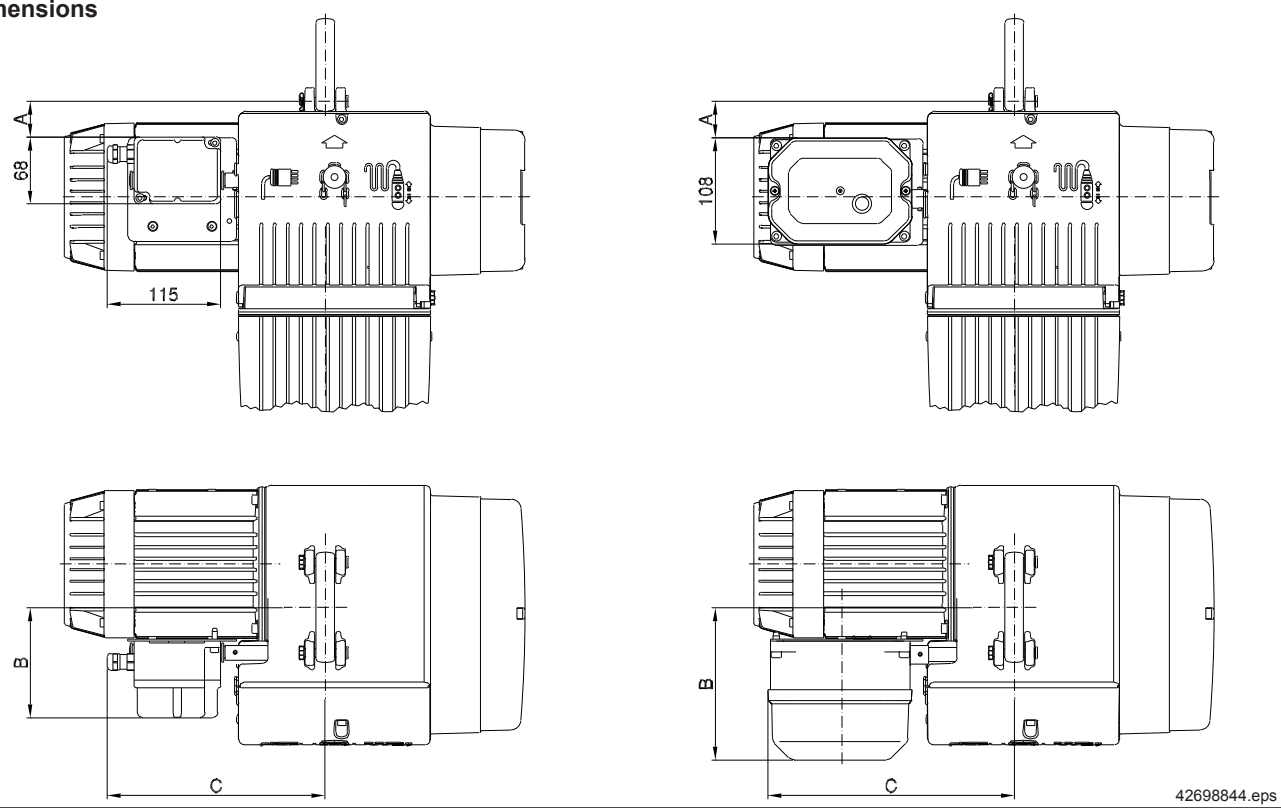

Chain hoist size	Reeving	3 contacts			4 / 8 number of contacts		
		A [mm]	B [mm]	C [mm]	A [mm]	B [mm]	C [mm]
DC 1 / DC 2	1/1	19	99	220	7	139	248
DC 5		36	112	221	37	156	250
DC 10	1/1	70,5	118	233	46,6	163	265
	2/1			268			300
DC 15	1/1	82	126	238	62	17	265
	2/1		135			179	

DC 16 - 25 chain hoist

Demag DC-Pro 16/25 chain hoists are provided with a geared limit switch as an operating limit switch for fast-to-slow and limit cut-off in the highest and lowest hook position, as standard. The geared limit switch is installed beneath the electric equipment cover and internally wired with the hoist control system. A second GGS is available for signal evaluation by the customer.

4.3.3 Pulse generator fitting

The rotary encoder is driven via a toothed belt with the motor speed in a transmission ratio of 1:1.

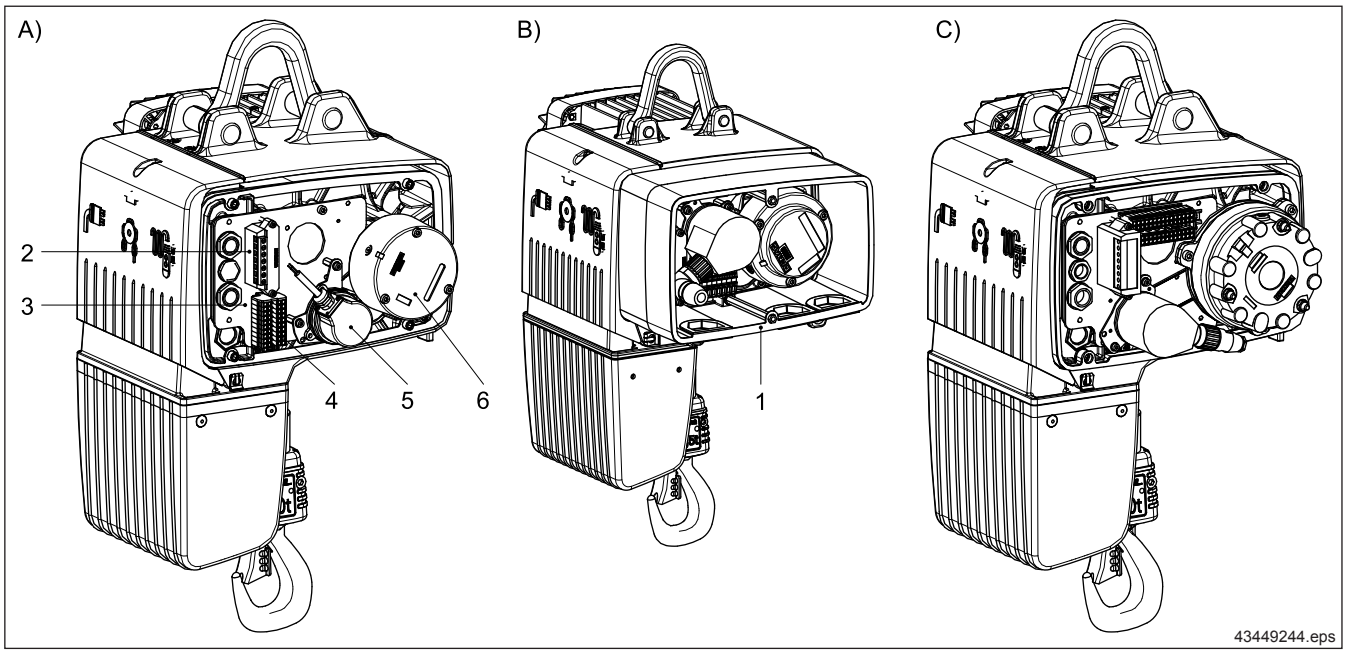

Chain hoist size	DC-ProFC 1 - 5	DC-ProFC 10 - 25	DC-ProDC 10	LDC-ProDC 10	DC-ProDC 16 - 25
Available encoder type	Incremental encoder		-		
	Combined rotary encoder				

A) DC-ProFC 1 - 10 with AG 1 - 2
B) DC-ProDC 1 - 5 with combined rotary encoder with intermediate flange
C) DC-ProDC 10 with combined rotary encoder and BC20 brake
1) Intermediate flange
2) Brake module
3) Mounting plate
4) Terminals
5) Rotary encoder
6) Brake

Combined rotary encoder		
General technical data	Temperature range	-20 … +70°C
	Type of enclosure	IP 65
	Connection	17-pole connector Coninvers
Absolute	Supply	11 - 27 V
	Format	SSI
	Code	Gray
	Level	RS 422
	Pulse number per revolution	1024 (10 bits)
	Revolutions	32768 (15 bits)
	Preset 1	30720000
	Preset 2	1024000
	Programmable	Yes
Incremental	Supply	11 - 27 V
	Increments	1024
	Interface	TTL

Encoder	Incremental encoder	Combined encoder	
Interface	Incremental (AG 1 / AG 2)	SSI (absolute)	Incremental
Supply voltage	5 … 30 V DC	11 ... 27 V DC	
Power consumption, typical	50 mA	50 mA	
Interface type	RS 422	RS 422	
Output level	H > 2,5 V DC L< 0,5 V DC	-	H > 2,5 V DC L< 0,5 V DC
Output load	max. 20 mA per channel	max. 50 mA per channel	
Output signals	A, /A B, /B N, /N	Graycode	A, /A B, /B
Phase offset A/B channel	90° + 7,5%	-	90° + 7,5%
Pulse number per revolution / revolutions	1024	1024 / 32768 (10 bits/15 bits)	1024
Pulse frequency	max. 150 kHz	-	max. 300 kHz
Permissible cable length (up to 6000 rpm)	250 m	150 m	
Connection	5 m cable with open end	17-pole connector	
Speed	max. 6000 rpm		
Type of enclosure	IP65		
Operating temperature	-40 .. +80 °C	-20 .. +70 °C	

For further information, please refer to the 'Dedrive Compact STO quick-step operating instructions', table page 17.

20352544.indd/180713

4.3.4 Overload cut-off with ZMS strain gauge carrier link

The slipping clutch acts as the **overload protection** of DC chain hoists.

To provide hoists and supporting structures with even better overload protection, an optional ZMS strain gauge carrier link can be used for an **overload cut-off function**.

If the suspended load exceeds the set value by more than 10%, the lifting motion is switched off. The lowering motion can still be used to deposit the load safely.

Besides the strain gauge carrier link, the overload protection function requires an electric evaluation unit. This is installed in a separate enclosure on the chain hoist or trolley. The additional electric equipment comprises the FGB-1 (frequency generator) and FAW-1 (frequency evaluator) load detectors.

Apart from overload protection, a slack chain function is also possible on application.

Suspension with strain gauge carrier link	H [mm]	B [mm]	R [mm]	T [mm]	Weight [kg]
DC 1 - 5	159	47	17	20	2,37
DC 10 1/1 reeving	187	58,5	22	19	3,56
DC 10 2/1 reeving	218	68,5	31	44	5,57
DC 15 - 25 1/1 reeving	213				6,70
DC 15 - 25 2/1 reeving	300	98	42	70	15,2

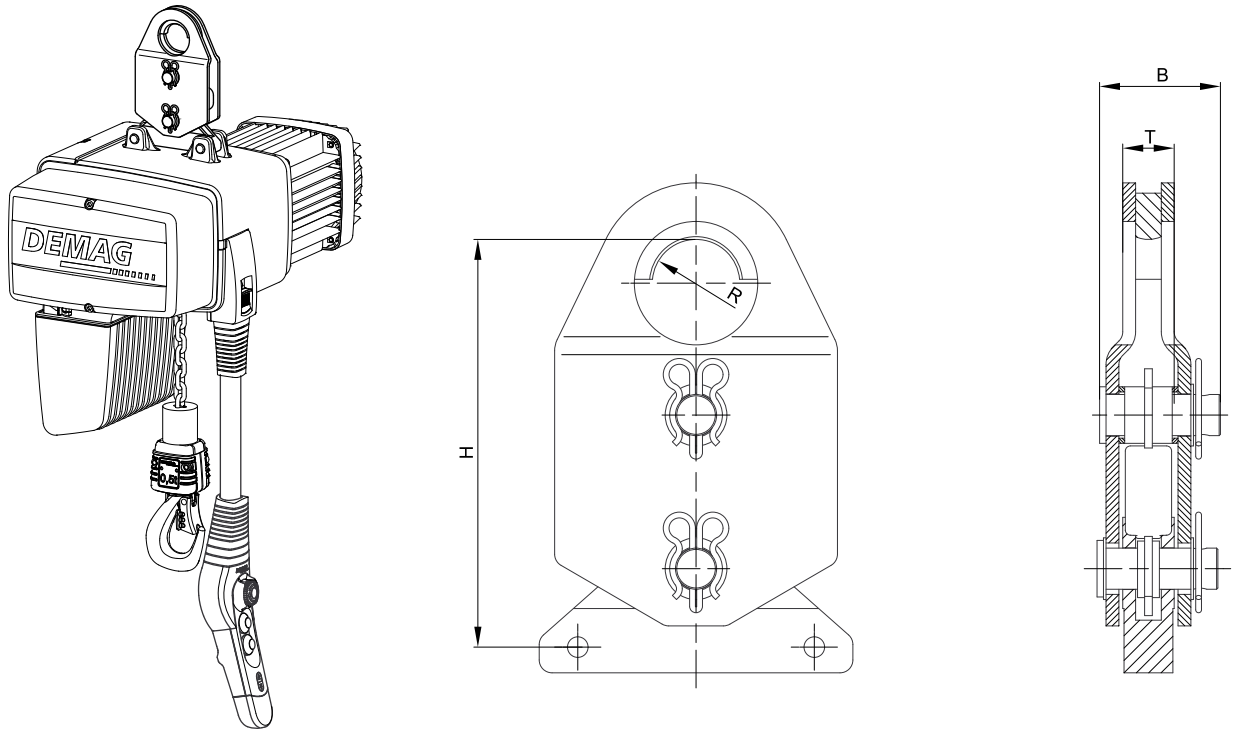

42735644.eps

4.3.5 Long and cross-travel limit switches

For further information, please refer to the 'E11-E34 DC (I)+(II) travel drive assembly instructions' and 'KBK Classic technical data', table page 17.

Cross-type limit switch for one or two-stage switching-off of the travel motion

Dimensions

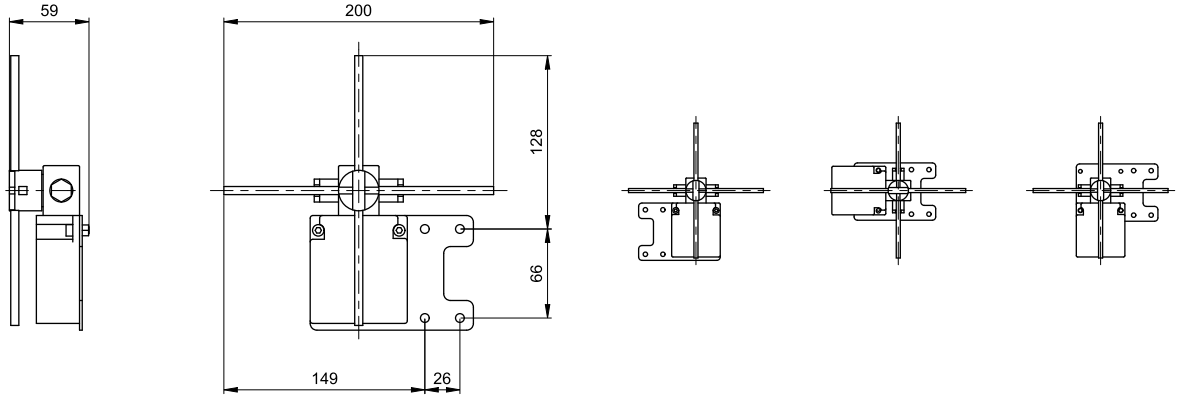

Examples for mounting **U11** **U22 / U34**

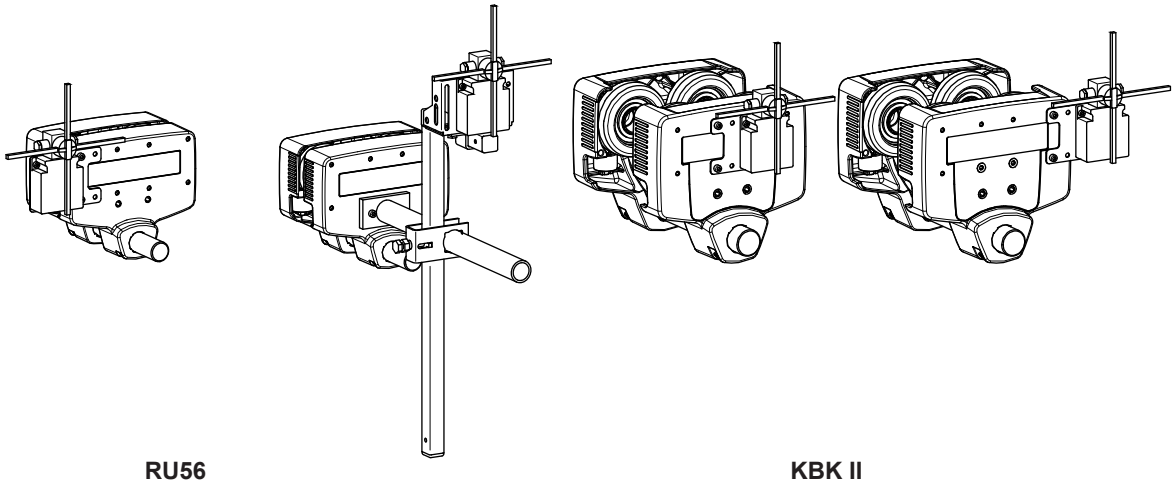

RU56 **KBK II**

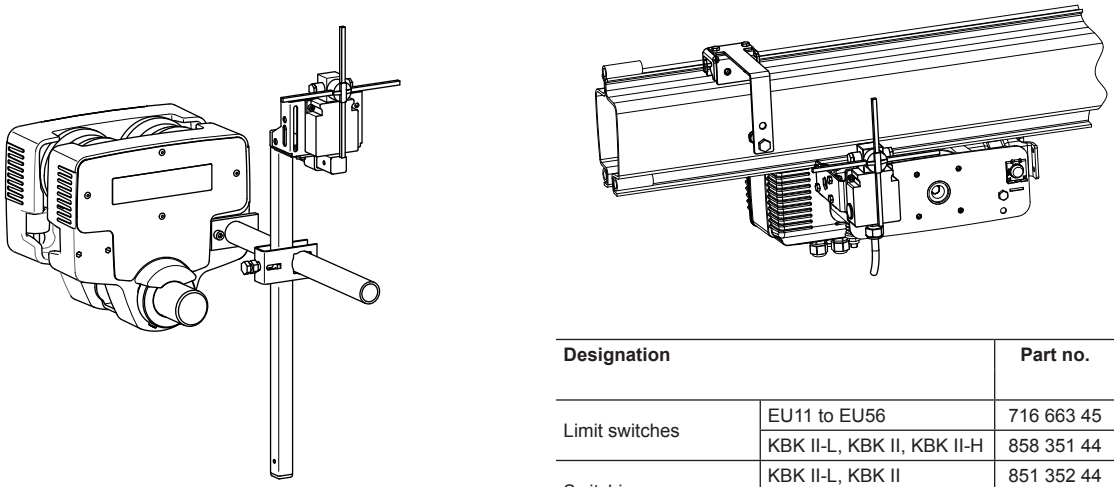

42700152.eps

Designation		Part no.	Weight [kg]
Limit switches	EU11 to EU56	716 663 45	1,60
	KBK II-L, KBK II, KBK II-H	858 351 44	0,85
Switching vane	KBK II-L, KBK II	851 352 44	0,60
	KBK II-H	858 352 44	0,66

Maintained-contact magnet switch

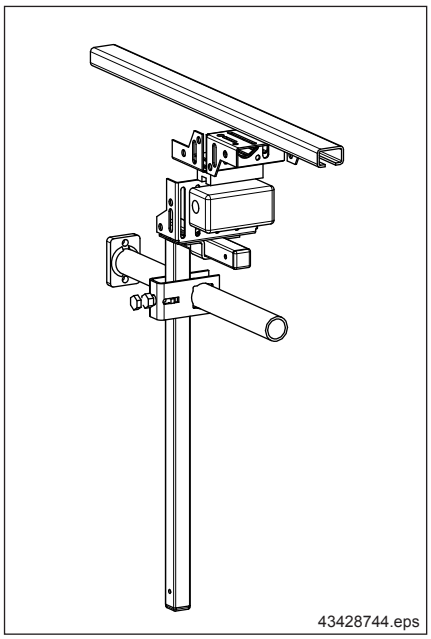

Switching vane on profile-section girders

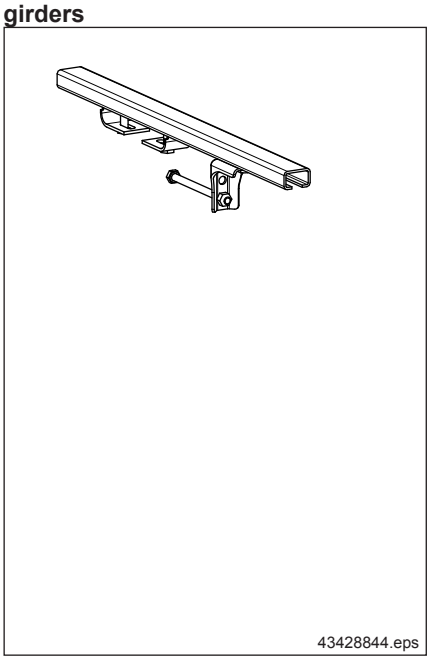

Designation	Part no.	Weight [kg]
Assembly parts for maintained-contact magnet switch	748 671 46	7,5
Switching vane on profile-section girders	748 032 46	2,6

Cut-out of the travel motion is possible mechanically by means of the travel limit switch on a switching vane / travel limit switch fitting or electrically by means of a maintained-contact magnet switch.

4.3.6 Electrical accessories

For further information, please refer to the 'DC electrical accessories technical data', table page 17.

The electric equipment also serves to convert signals between pole-changing DC chain hoists with tri-state signal transmission (DCS with PWM signals) and crane systems that are fitted with conventional electrical contactor controls.

The DC Polu-box is used as a contactor control arrangement between the chain hoist and the travel unit for controlling three-phase AC drives (e.g. in the case of long-travel drives or slewing cranes with a slewing drive).

The signal converter, terminal box and DC Polu-box can be fitted to the DC chain hoist motor in the case of sizes DC 1-15.

Universal E-Box: type of enclosure IP 55

It may be necessary to fit them in a different position depending on any other equipment (e.g. Harting connector in the power supply line or geared limit switch for DC 1-15).

On DC-Pro 16/25 units, the signal is modified with 3TK and KT3 plug-in modules (42 - 230 V, 50/60 Hz). These are integrated beneath the electric equipment cover.

Depending on the application, crane bridge enclosures must be selected with EU11 - EU34 trolleys and for installations with AC motors for the travel drive.

4.3.6.1 Electric enclosure and signal converters

3T3 terminal box

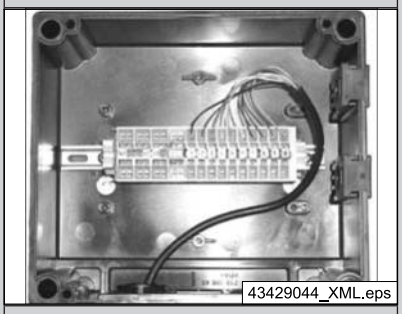

43429044_XML.eps

Manual travelling hoist terminal box

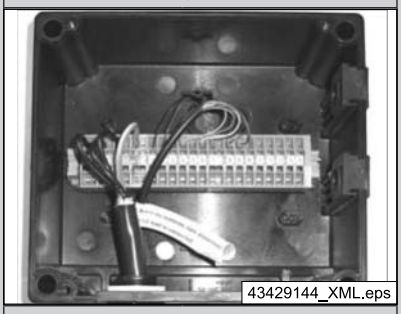

43429144_XML.eps

DC / diode terminal box

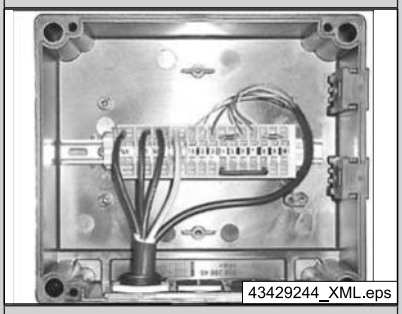

43429244_XML.eps

Polu-box

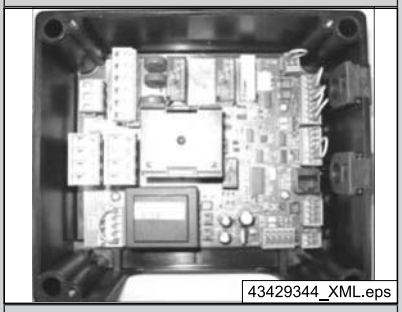

43429344_XML.eps

3TK signal converter

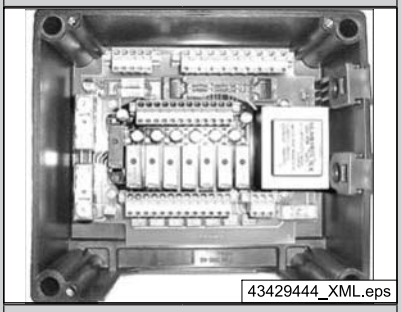

43429444_XML.eps

KT3 / DT3 signal converter

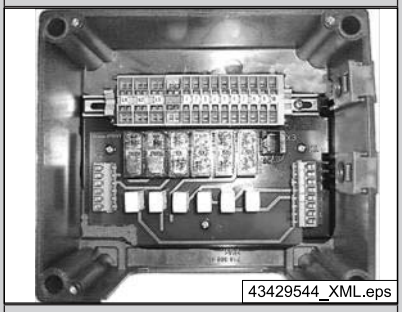

43429544_XML.eps

Crab module

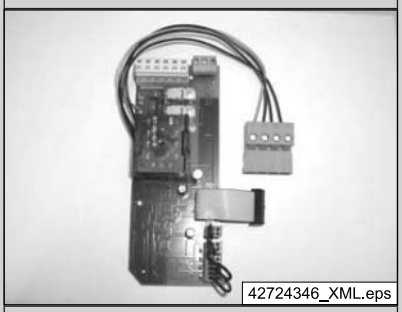

42724346_XML.eps

3TK signal conversion module, crane axis

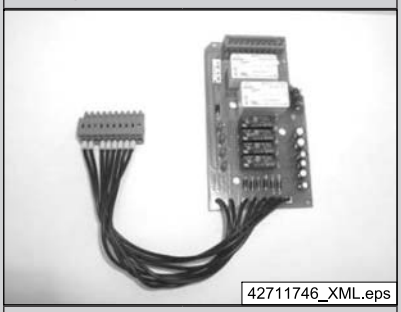

42711746_XML.eps

KT3 signal converter module

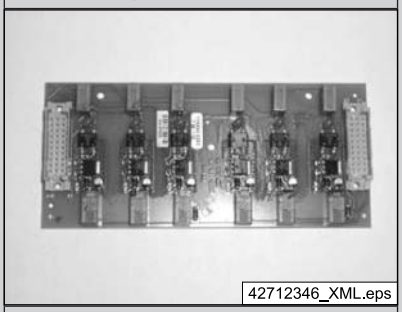

42712346_XML.eps

PWM / tri-state signal converters

43429644_XML.eps

Analogue / PWM signal converters

43429744_XML.eps

KRBG crane bridge enclosure

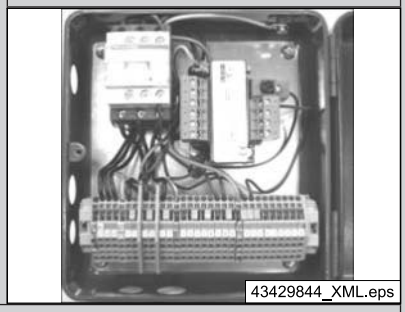

43429844_XML.eps

Universal E-box

43428944_XML.eps

KRBG 2 crane bridge enclosure

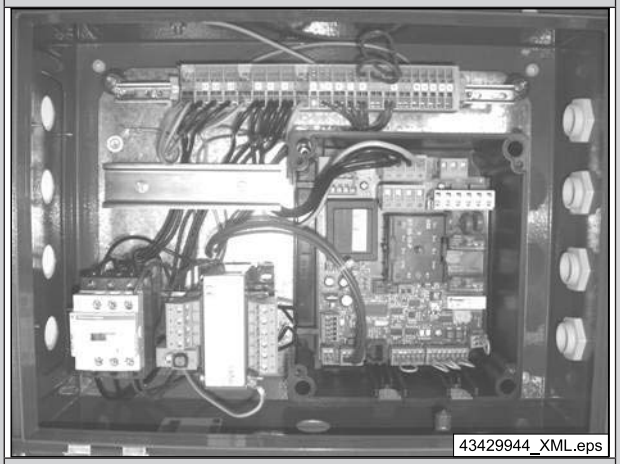

43429944_XML.eps

Designation	Application	Function	Part no.
3T3 terminal box Power and signal distribution (incl. signal cable to DC and mounting plate)	DC 1 - 25		772 174 45
Manual travelling hoist terminal box Electric long travel, manual cross travel (incl. power and signal cable to DC and mounting plate)	DC 1 - 15		772 175 45
DC / diode terminal box Control of the DC unit via floating contacts with 24 V AC(incl. diodes, power and signal cable to DC and mounting plate)	e.g. control unit provided by the customer, PLC control system.	Converting parallel control contact signals into tri-state signals Power distribution, signal distribution (flat/round cable to RJ45 cable). Not for DCS-Pro / DC-ProDC/CC/FC.	DC 1 - 15 772 165 45 DC 16 - 25 772 168 45
Polu-box Control of an AC travel motor up to 2x750 W (for DC16/25 with EU56 use crab module 720 335 45!)	DC 1 - 15, travel applications with squirrel-cage rotor motors, e.g. DRF 200, EUD articulated trolley, end carriage drives, slewing cranes with a slewing drive.	Contactor control for DC systems with tri-state control signals. Connection for power distribution, limit and fast-to-slow switches, pole-changing motor and control signals to the chain hoist via RJ45 plug connection.	772 280 45
Crab module	DC 16 - 25	The trolley module is required for controlling an AC asynchronous motor as travel or slewing drive. The motor may have one or two numbers of poles and be provided with an electro-mechanical brake.	720 335 45
3TK signal converter 3-state to conventional ➔ Generation of conventional control signals / contacts of 42 V, 48 V, 115 V and 230 V, 50/60 Hz (incl. mounting plate)	DC 1 - 15, for replacing an existing hoist unit with contactor control, control pendant on DC.	Is used for converting tri-state signals of the chain hoist in floating contacts for conventional contactor controls. Forward, Reverse, Fast, Right, Left, Fast, Special signal_1, Special signal_2, Emergency-stop (safety relay) contacts. Is only used for the crane axis, if the DSE is fitted on the DC hoist.	772 176 45
3TK signal conversion module, crane axis (3-state to conventional ➔ conventional output)	DC 16 - 25	24 V ACtri-state control signals can be converted into conventional control signals from 42 V to 230 V ACfor the crane axis. In addition, the module also isolates the emergency-stop contact via two interlocked safety relays.	720 345 45
KT3 signal converter Conventional to 3-State DC control by means of conventional control signals / contacts 42 V, 48 V, 110 V and 115 V, 50/60 Hz (incl. mounting plate)	DC 1 - 15, for replacing an existing hoist unit with contactor control, control pendant is mobile or not fitted to the travelling hoist.	Is used to convert conventional signals (Lifting, Lowering, Fast, Right / Forward, Left / Reverse, Fast, Emergency-Stop) into tri-state signals for DC chain hoist / travelling hoist.	772 177 45
KT3 signal converter module Conventional to 3-State ➔ conventional input)	DC 16 - 25	Conventional control signals can be converted from 42 to 230 V AC, 50/60 Hz into 'tri-state' signals on 24 V AC basis. The module can also be used for 24 V DC signals (e.g. PLC).	720 340 45
DT3 signal converter Direct to 3-state DC control by means of conventional control signals / contacts 230 V AC, 50/60 Hz (incl. mounting plate)	DC 1 - 15, application as KT3 signal converter, different voltage range	Is used to convert conventional signals (Lifting, Lowering, Fast, Right / Forward, Left / Reverse, Fast, Emergency-Stop) into tri-state signals for DC chain hoist / travelling hoist.	772 166 45
PWM / tri-state signal converter	Is used to convert PWM signals for DC 1 - 25 hoists ● tri-state signals, ● conventional V1 / V2 signals, ● infinitely variable analogue signals (0-5 V or 0-10 V) with direction contacts.		720 185 45
Analogue / PWM signal converter	Is used to convert analogue signals (0-5 V DC or 0-10 V DC) for DCS-Pro 1 - 15 hoists ● Control of DCS-Pro via PLC with analogue output ● Parallel control of two or several DCS-Pro chain hoists with DRC-MP radio control system		720 188 45
KRBG crane bridge enclosure (230-575 V / 50/60 Hz)	Crane applications, e.g. KBK crane with DC travel drives	Used to provide power supply for crane installations with DC systems (tri-state signals). Enclosure with crane switch contactor, 24 V ACcontrol transformer, connection for power and signal distribution to DC travel drives.	772 278 45
KRBG 2 crane bridge enclosure (230-575 V/ 50/60 Hz), incl. Polu-box	Crane applications, e.g. KBK crane with DRF 200 as crane drive, pillar-mounted slewing jib with AC motor as slewing drive	Used to provide power supply for crane installations with travelling hoist featuring DC systems (tri-state signals) and for connecting pole-changing motors via Polu-box (e.g. end carriage drives with max. 2 x 750 W). Enclosure with crane switch contactor, 24 V ACcontrol transformer, integrated Polu-box, connection for power and signal distribution to DC travel drives and connection for end and fast-to-slow limit switches.	772 378 45
Universal E-box	DC 1 - 25 (incl. terminal strip, cable unions, mounting plate)		772 167 45

For further information, please refer to documents table page 50:

- **'DC PWM/3ST signal converter assembly instructions',**
- **'DCS analogue/PWM signal converter assembly instructions',**
- **'DC electrical accessories technical data',**
- **'Polu-box electrical accessories technical data'.**

4.3.6.2 Assembly parts for electric enclosure

Examples for attachment:
Motor-side fitting

An additional electric enclosure may need to be installed in certain applications (see next page).

The bore holes on the motor ribs serve as attachment points for the mounting plate.

DC 5

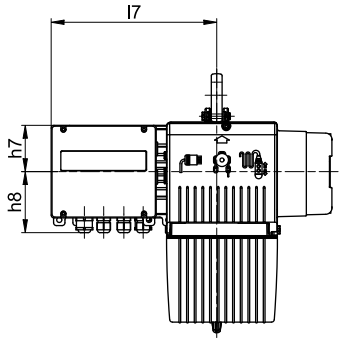

DC 10

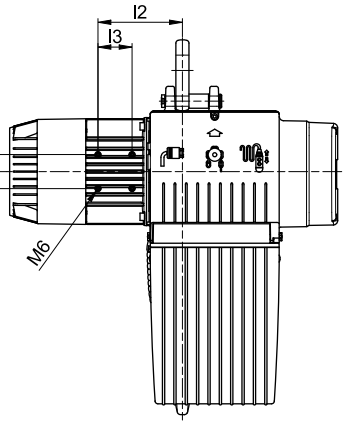

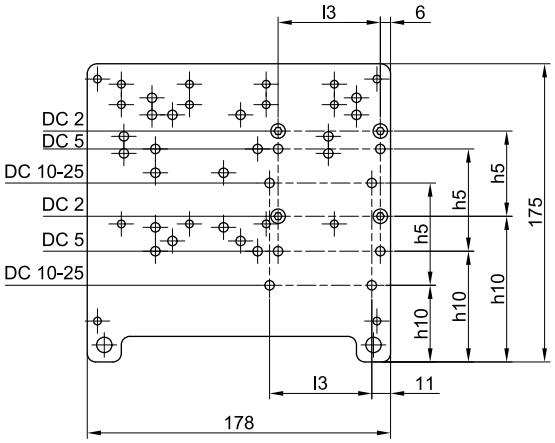

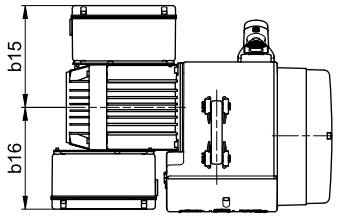

Size	Reeving	b15	b16	l2	l3	l7	h5	h7	h8	h10
DC 1 - 2	1/1	167	167	170	60	286	50	66	123	85,5
DC 5		180	180	175		292	60	82	107	65
DC 10		211	198	182		294		102	87	45
	2/1			147		259				
DC 15	1/1			198		310				
	2/1									
DC 16 - 25	1/1			177		294		82	107	
	2/1									

Mounting examples:
DC 5 with 2 electric enclosures
GGS

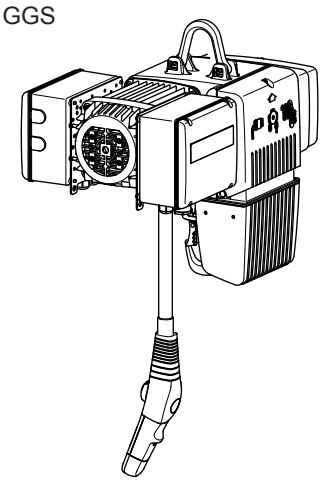

DC 10 with 2 electric enclosures

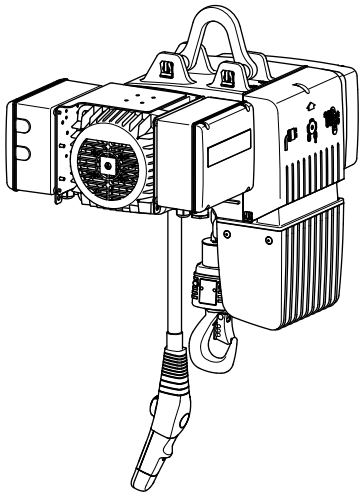

DC 5 with 1 electric enclosure and 1

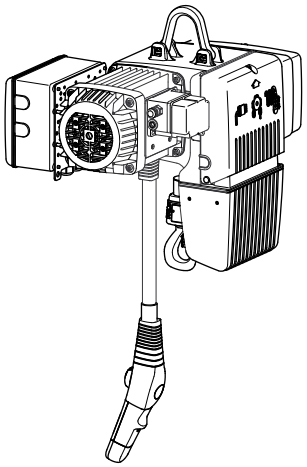

42736545.jpg

Designation	Component	Part no.	Weight [kg]
Enclosure mounting plate	DC 1-25	718 383 45	0,460
Angle bracket	DC 10-25	718 335 45	1,150

The enclosure is always fitted to the motor on the control pendant side if a geared limit switch or Harting plug arrangement is fitted.

Examples for attachment:
Mounting by means of suspension eyes

Enclosure fitted by means of frame for fitting counterweight

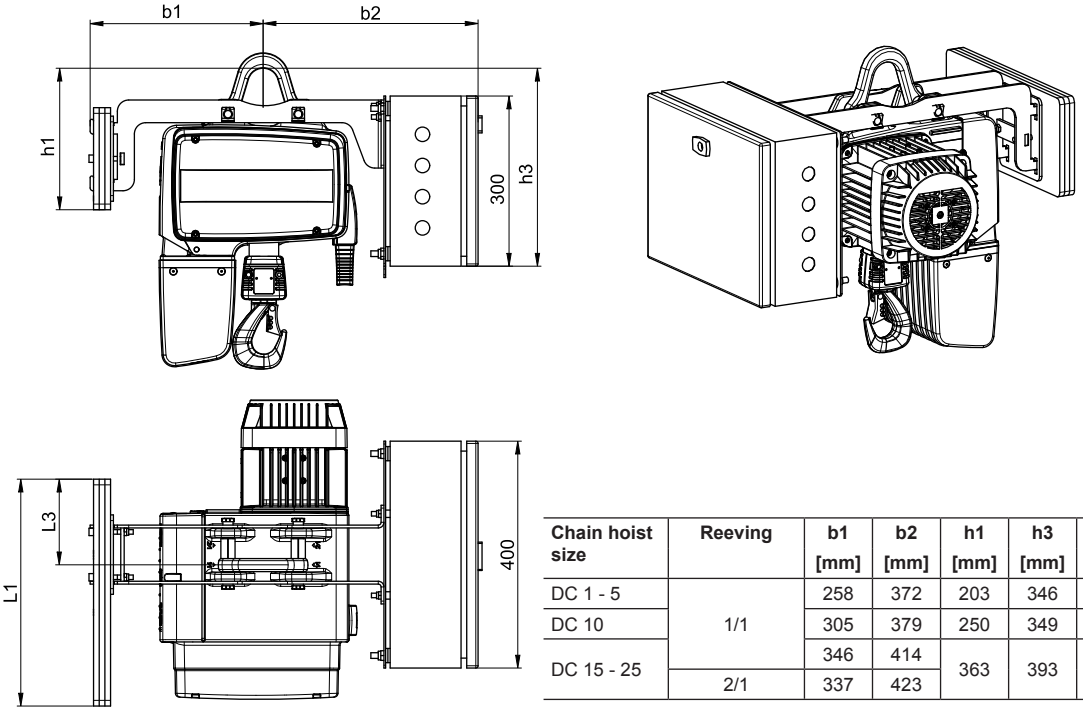

43430544.eps

Chain hoist size	Reeving	b1 [mm]	b2 [mm]	h1 [mm]	h3 [mm]	L1 [mm]	L3 [mm]
DC 1 - 5	1/1	258	372	203	346	325	-
DC 10		305	379	250	349	400	151
DC 15 - 25		346	414	363	393	500	250
	2/1	337	423				

Folding enclosure fitting permits access to the service enclosure of sizes DC 1 - 10

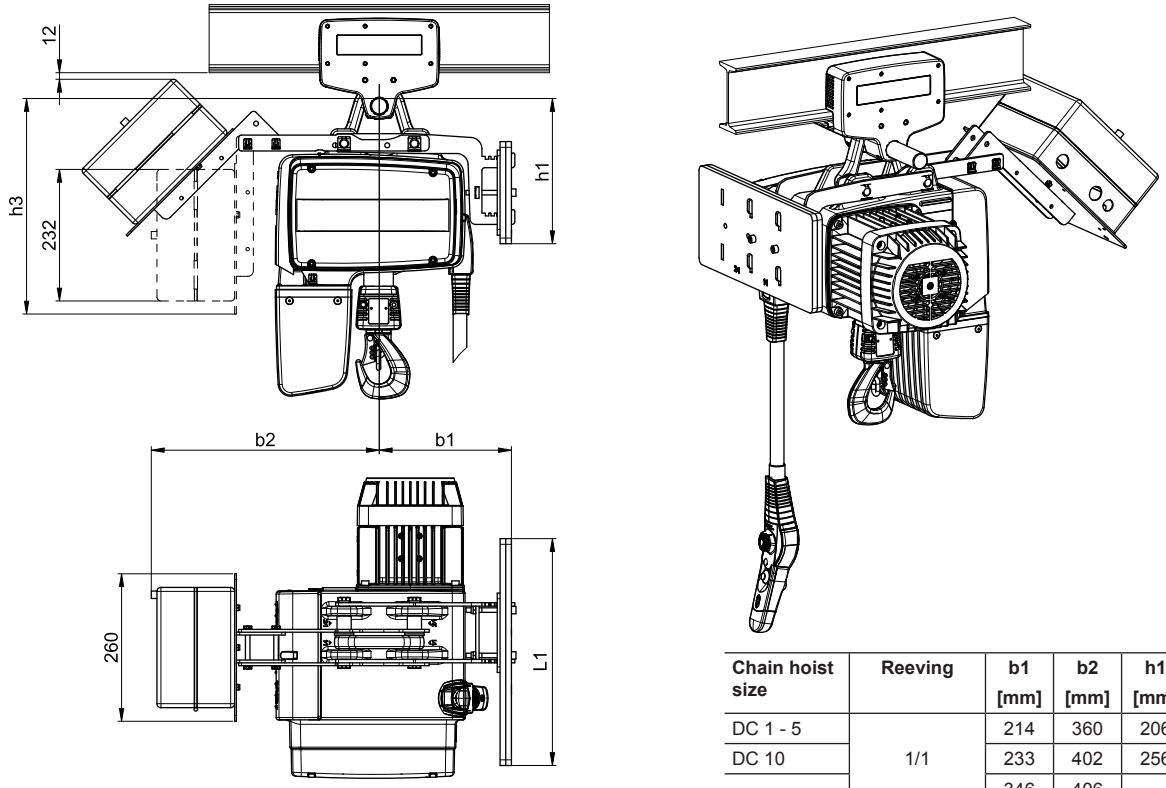

43430644.eps

Chain hoist size	Reeving	b1 [mm]	b2 [mm]	h1 [mm]	h3 [mm]	L1 [mm]
DC 1 - 5	1/1	214	360	206	366	325
DC 10		233	402	256	380	400
DC 15 - 25		346	406	363	358	500
	2/1	337	415			

Examples for attachment:
Fitting by means of current collector tube

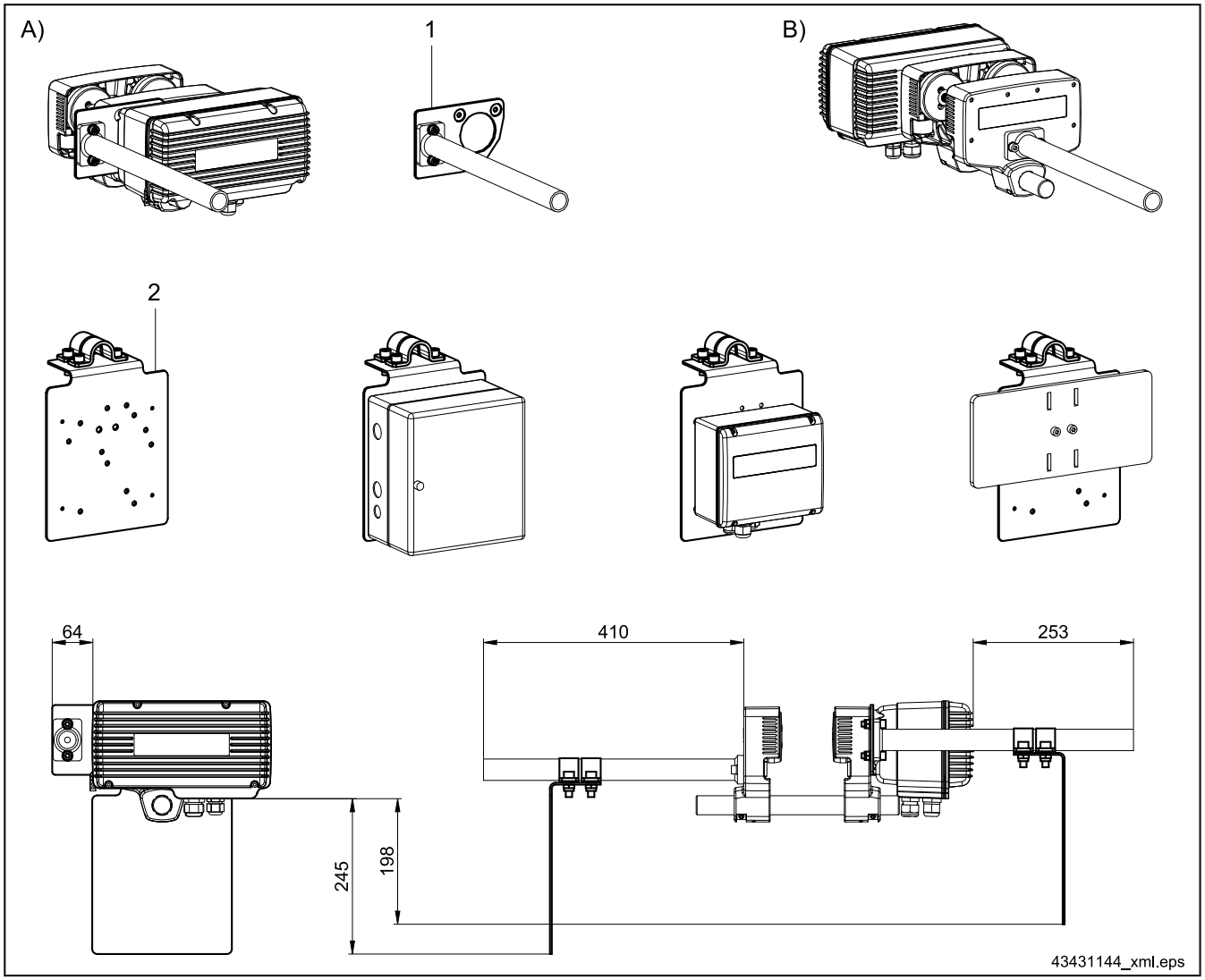

Item	Designation	Part no.	Weight [kg]
A)	Current collector fitting on travel drive	-	-
B)	Current collector fitting on trolley		
1	Mounting plate for current collector fitting on travel drive	716 725 45	0,430
2	Mounting plate for current collector fitting on trolley	749 185 46	6,500

4.3.7 Tandem operation

For further information, please refer to the 'DC 1 - 25 tandem assembly instructions', table page 17.

The tandem control system fulfils the requirements of the machinery directive for safe and simultaneous operation of two hoist units via one control position.

Tandem operating mode is used when extremely heavy or long goods are transported by two chain hoists or two travelling hoists at the same time.

Joint lifting / lowering may cause the load to be inclined if one of the two chain hoists travels against a limitation device (e.g. limit switch, slipping clutch) or stops as the result of a fault. The chain hoists are provided with the 'Common cut-off' safety function in order to avoid hazards caused by such an inclined position of the load. This ensures that if one chain hoist is switched off by a limiting device or a fault, the second chain hoist is also stopped.

Absolutely synchronous operation is not ensured by the tandem control system.

Tandem operation makes it possible to select control of one or two chain hoists or two travelling hoists in parallel by means of a control pendant or a radio transmitter. The operator takes over command control for the joint control of the chain hoists and / or travelling hoists by means of a hand-over procedure (operating mode selector switch).

Comply with the operating instructions of the radio remote control system or the control pendant used for operation of the common control position. The following tandem designs are available:

Long loads

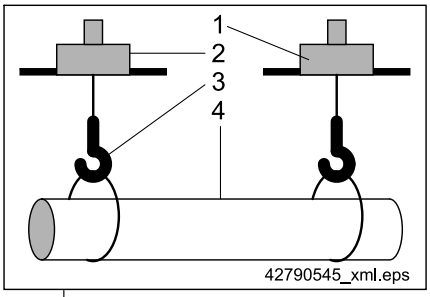

1	Chain hoist / travelling hoist 1
2	Chain hoist / travelling hoist 2
3	Attachment point of the load
4	Load

Heavy loads by means of load handling attachment

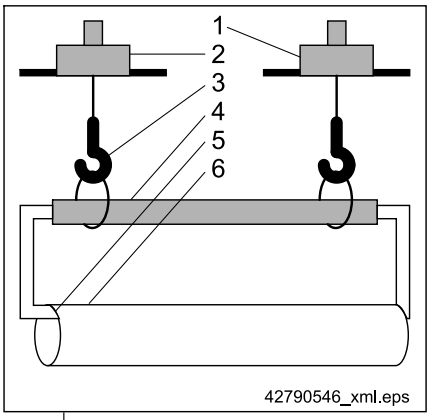

1	Chain hoist / travelling hoist 1
2	Chain hoist / travelling hoist 2
3	Attachment point of the load handling attachment
4	Load handling attachment (e.g. spreader)
5	Attachment point of the load
6	Load

2 chain hoists - stationary no trolley				
Tandem box	X			X
2DC terminal box		X	X	
External GGS4 geared limit switch				X
DST7-C with selector switch	X		X	
DST3-C without selector switch		X		X
Schematic diagram	1	2	2.1	3

2 chain hoists - travelling hoists									
each fitted with an electric-travel trolley, trolleys can travel separately	X	X	X	X	X	X			
with a common electric-travel trolley, mechanically connected							X		
with a common pole-changing travel trolley, mechanically connected								X	
with a double electric-travel trolley, mechanically connected									X
on a common track	X	X	X				X	X	X
on parallel tracks				X	X	X			
Tandem box	X	X	X	X	X	X	X	X	X
Terminal box	X	X	X	X	X	X			
Polu-box								X	
Mobile control system		X			X				
DST7-C with selector switch	X	X		X	X		X	X	X
DRC-MP radio control system			X			X			
Schematic diagram	4	4.1	4.2	5	5.1	5.2	6	6.1	7

2 chain hoists - crane design					
no electric cross-travel unit, mechanically connected				X	X
each fitted with an electric cross-travel unit, trolleys can travel separately	X	X	X		
on a common track	X	X	X		
Tandem box	X	X	X	X	X
Long-travel drives with pole-changing motors	X		X	X	X
Long-travel drives with electric-travel trolleys		X			
Crane bridge enclosure with Polu-box	X		X	X	X
Mobile control system	X	X			X
DST7-C with selector switch				X	X
DST9-C with selector switch	X	X	X		
DRC-MP radio control system		X			
Schematic diagram	8	9	10	11	12

4.3.8 Power supply lines

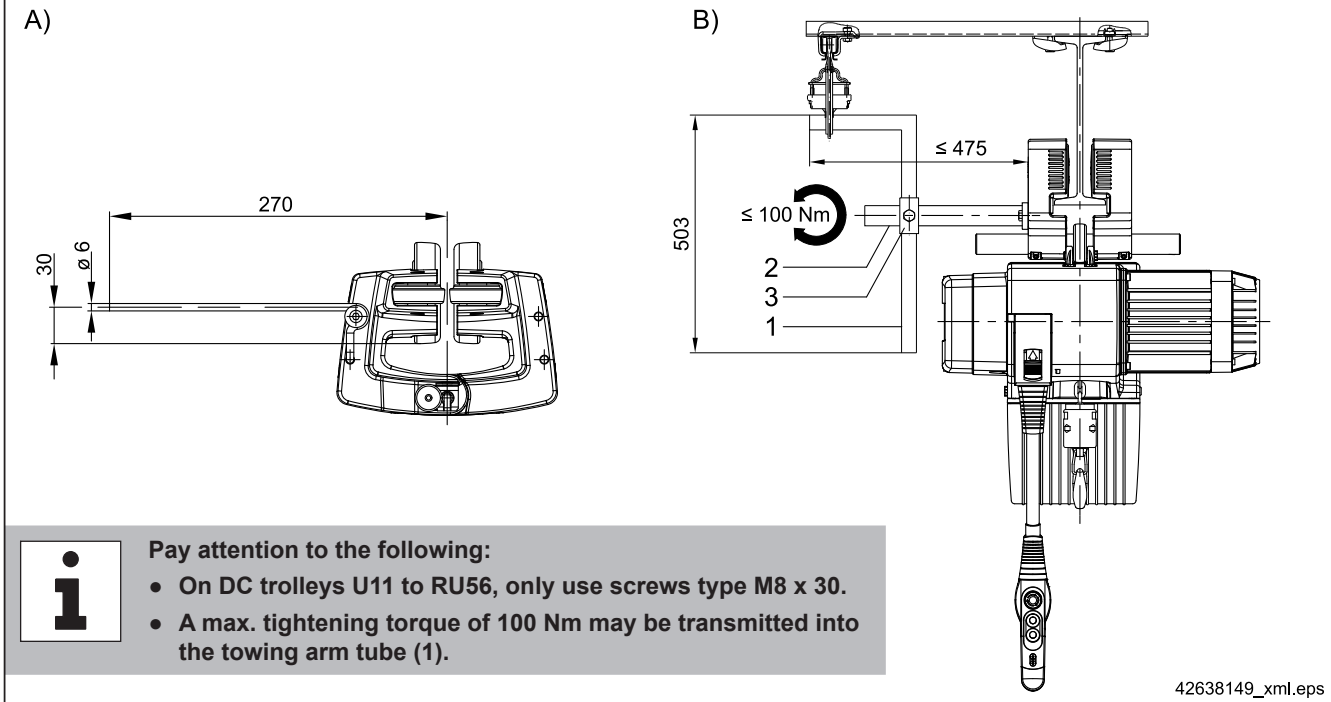

Pay attention to the following:

- **On DC trolleys U11 to RU56, only use screws type M8 x 30.**
- **A max. tightening torque of 100 Nm may be transmitted into the towing arm tube (1).**

Item	Designation	Trolley	Part no.
A)	Current collector	CF 5 click-fit	840 085 44
B)	Current collector consisting of: Towing arm tube (1), current collector tube (2), tube clip (3)	U11 - U34 RU / EU56	716 560 45

Example: KBK 25

KBK 25 trailing cable power supply line for straight track sections up to 30 m in length, comprising:

1 KBK 25 rail section (galvanised)
2 Towing trolley
3 Flange clamp
4 C-rail 800 mm
5 I-beam girder (by the customer)
6 Clamp-fitted buffer
7 Control pendant
8 Chain hoist
9 C-rail bracket
10 Cable trolley
11 Trailing cable
12 Rail end cable clamp
13 Adjustable limit stop
14 Terminal box
15 Mains connection switch
16 Rising line (by the customer)

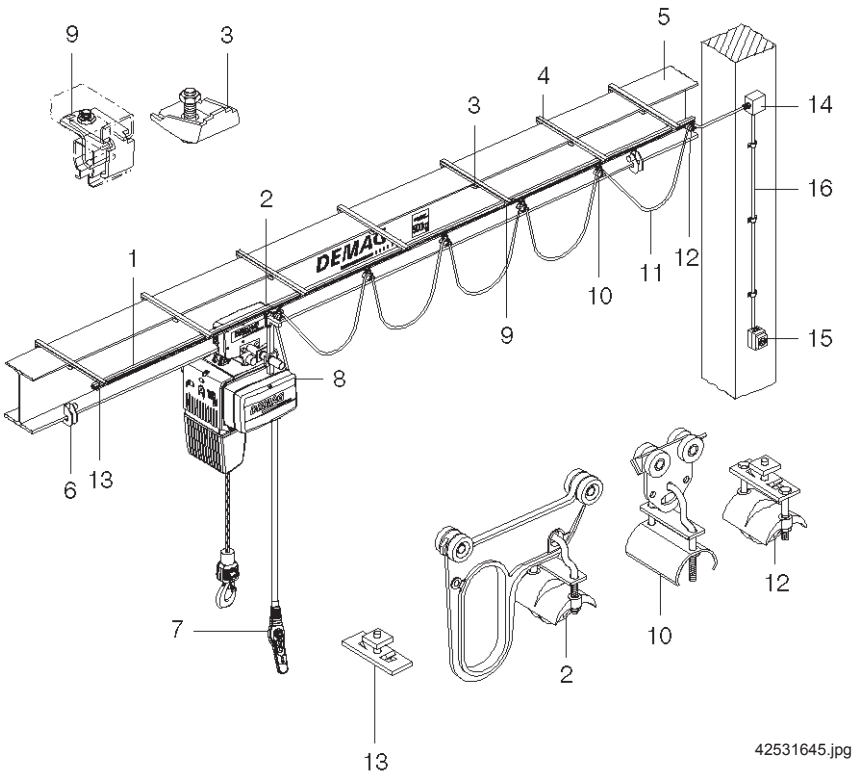

For further information, please refer to the 'KBK trailing cable power supply technical data', table page 17.

DCL-Pro with end power feed or centre power feed

The DCL-Pro compact conductor line may be used as an alternative to the trailing cable as the power supply system.

Owing to the patented connection system, installation is quick and easy. The rail elements are supplied pre-assembled and do not have any loose parts. Connection to your structure is possible either by means of threaded pins or suspension fittings for C-rails.

The DCL-Pro is available as a 4 to 7-pole enclosed conductor line system with IP23 type of enclosure (IP24 optional); it can be optimally adapted to your structure owing its the modular design.

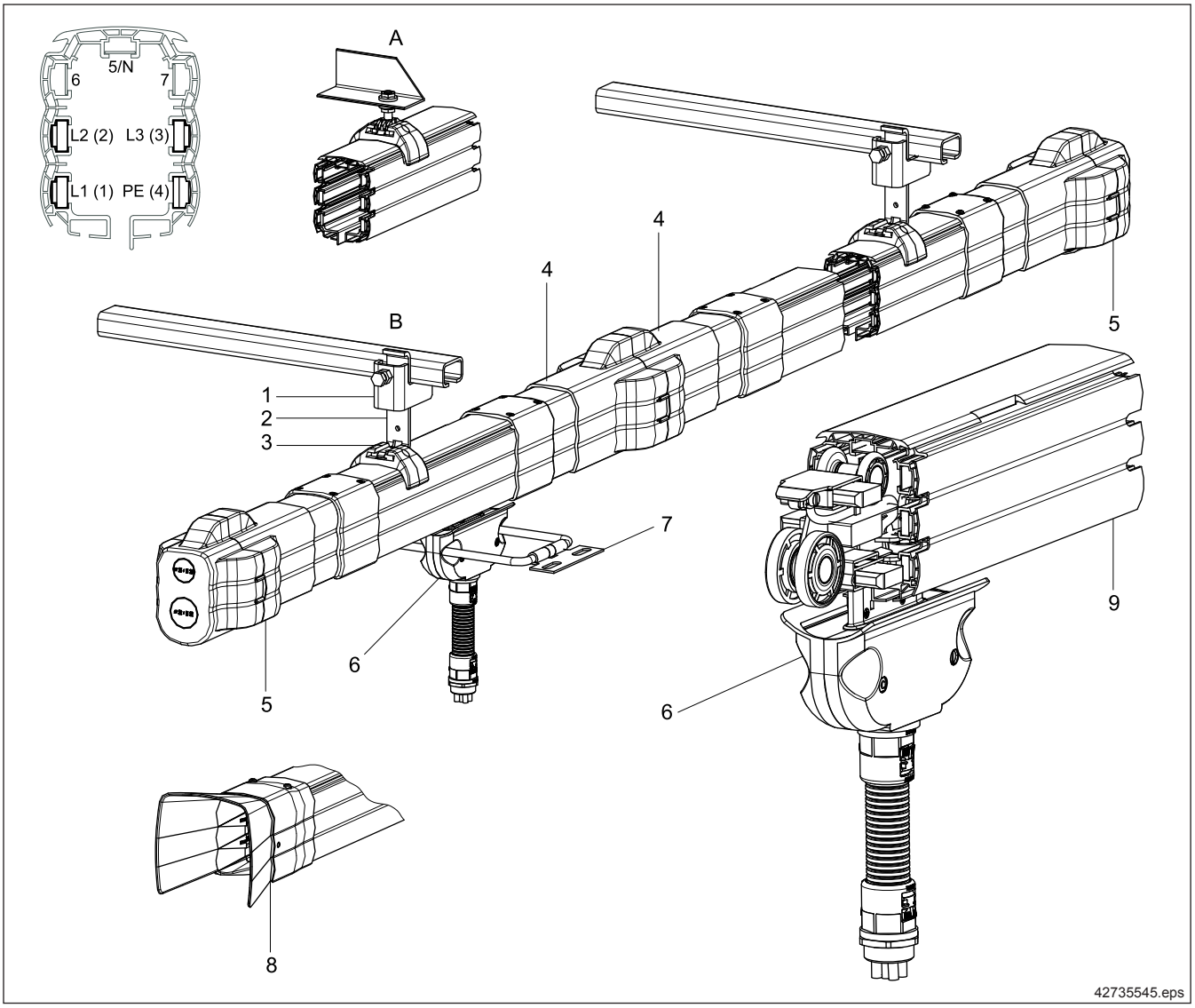

A) Suspension with M8 threaded pin
B) Suspension from C-rail
1) Clamp section
2) Attachment bracket
3) Sliding suspension
4) Connector caps
5) Connector end cap (with power feed)
6) Current-collector trolley
7 Towing arm
8) Entry/ramp section
9) Straight section (standard length 4000 mm)

For further information, please refer to the 'DCL-Pro conductor line technical data', table page 17.

5 Control units

5.1 Overview and functions of the control units

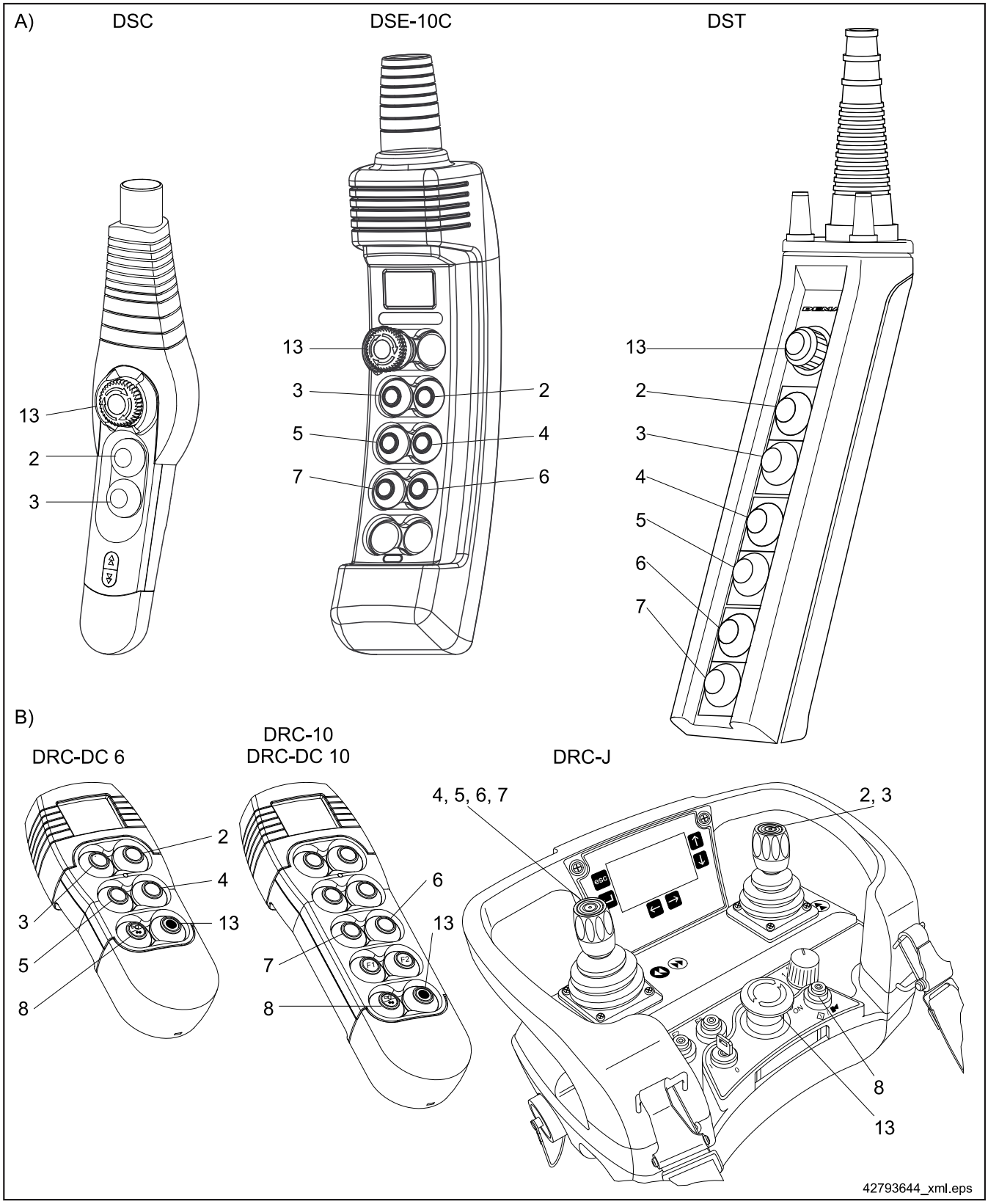

Item	Function	Item	Function	Item	Function
A)	Cable-connected control pendant	4	Trolley right	8	Signal, signal horn
B)	Hand-held transmitter for radio control	5	Trolley left	13	Emergency stop
2	Lifting	6	Crane forwards / slewing right		
3	Lowering	7	Crane reverse / slewing left		

5.2 Standard control pendants

Standard DSC/DSC-S (lifting/lowering) or DSE-10C/CS (2 to 3 axes) control pendants are used for manual cable-connected control of the chain hoist. Both control pendants feature the same plug-in connection for the control cable. The control cable and the control pendant are connected by means of a bayonet lock.

DSC / DSC-S and DSE-10C/CS control pendants can be fitted to the height-adjustable standard control cable for DC chain hoists.

An attachment set (part no. 773 371 44) is needed for connection to the DC support sleeve and 2TY cable.

Design features

- No internal wiring is required in the pendant housing thanks to the plug-in connection.
- The housing is made of high-quality thermoplastic which is highly resistant to impacts.
- Protective insulation to VDE 0100 part 410, section 6.2.
- Switching distances and forces to DIN 33 401, holding force < 8 N.
- IP 65 enclosure to DIN VDE 0470 T.1 and EN 60 529 as standard.
- The housing is non-flammable, climate and corrosion-proof.
- Largely resistant to fuels, salt water, grease, oils and lyes.

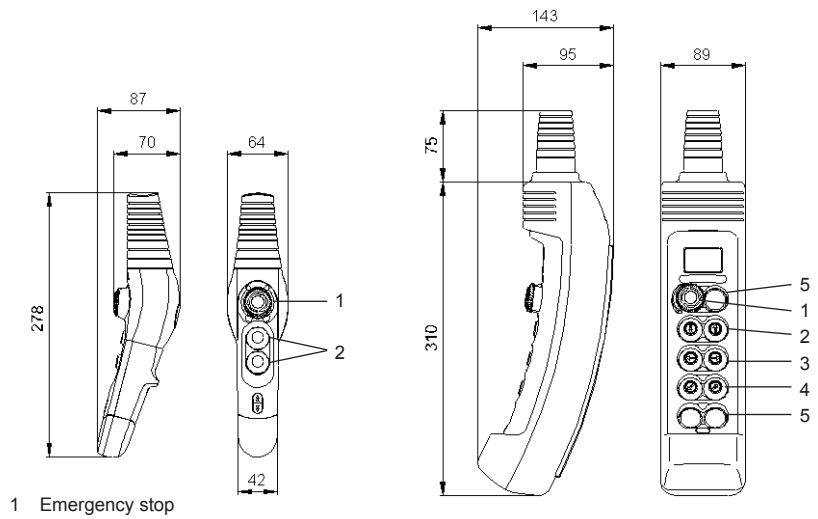

1 Emergency stop
2 Hoist unit
3 Cross-travel unit
4 Long-travel unit
5 Optional special function

42735044.jpg

Designation			Part no.	Weight [kg]
DSC	For stepped motions	without control cable	773 300 33	0,380
DSE-10C			773 352 45	0,840
DSC-S	For stepless motions		773 500 33	0,380
DSE-10CS			773 353 45	0,840

For further information, please refer to the 'DSE10-C control pendant assembly instructions', table page 17.

5.3 Standard control cable

The control cable is protected by a flexible, easily bent strain relief hose. Its suspension height can be specifically adapted to the requirements at the workplace at any time by means of an adjusting mechanism. To do this, it is not necessary to cut the cable conductors or to shorten the strain relief hose. The adjustable-height control cable is available in 3 different lengths up to a maximum hook path H11 (9,8 m length). The length of control cable that is not needed (max. 3 m) is stored under the service cover or in the cable collector. The strain relief hose is fixed at the selected suspension height by means of a self-locking clamp mechanism. The control pendant can be adjusted to a different suspension height by unlocking the clamp mechanism.

The strain relief hose for the control pendant consists of an abrasion-resistant fabric hose with flame-protection impregnation.

The control cable is reinforced by means of rubber-elastic filler material in the gripping area (0,8 m above the control pendant) of the strain relief hose.

Designation		Part no.
Standard control cable	H4 / H5	718 810 33
	H8	718 809 33
	H11	720 037 45

5.4 Mobile control pendant

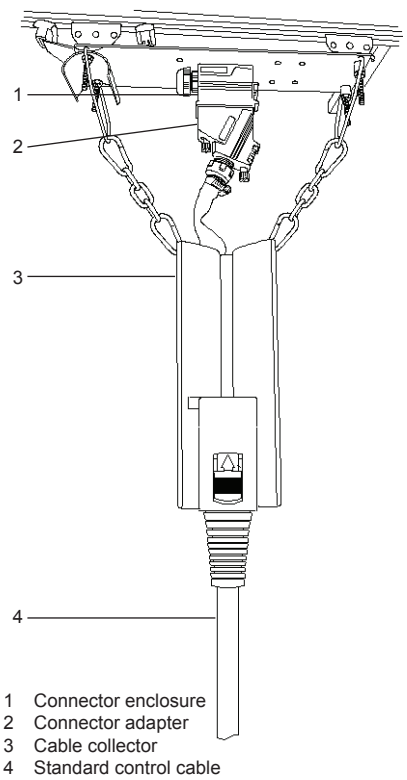

1 Connector enclosure
2 Connector adapter
3 Cable collector
4 Standard control cable

42360745.jpg

As an alternative to the control pendant fitted direct to the chain hoist, the control pendant can travel independently of the position of the chain hoist along a separate KBK 25 rail parallel to the track. This enables the chain hoist and trolley to be controlled with ease in the case of awkward loads or in inaccessible positions.

Component parts		
Item	**Designation**	**Part no.**
1	Connector enclosure cpl. for 2x6x0,5 mm^2 cable (720 139 45)	720 187 45
2	Connector adapter cpl.	720 087 45
3	Cable collector	720 065 45

For further information, please refer to the 'KBK trailing cable power supply technical data', table page 17.

5.5 Control cable / control pendants for special ambient conditions

For extreme ambient conditions, e.g. in galvanising facilities, foundries, damp rooms or hot applications, it may be necessary to:

- replace the standard height-adjustable control cable by the control cable with a support sleeve or the 2TY control cable and / or
- replace the standard control pendant for a DSK or DST unit.

Other control pendant designs on request.

DC support sleeve

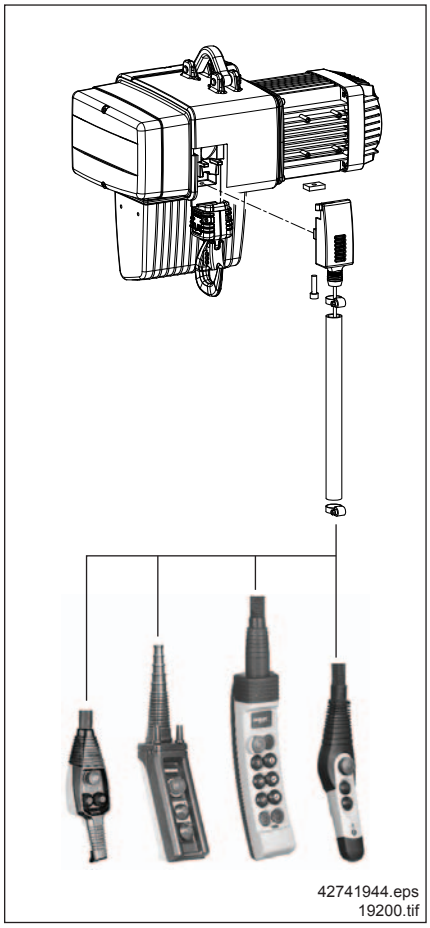

The height of the external protective sleeve cannot be adjusted; the height of the inner signal cable can, however, be adjusted.

The DC support sleeve control cable can be combined with:

- DSC / DSC-S / DSE-10C/CS
- DST-3/7/9C/CS / DSK-3C/CS

Designation	Hook path (cable length)	Part no.
DC control cable with support sleeve incl. attachment material [1]	H4 (2,8 m)	720 082 45
	H5 (3,8 m)	720 074 45
	H8 (6,8 m)	720 079 45
	H11 (9,8 m)	720 133 45

1) An attachment set (part no. 773 371 44) is needed for connection of the DSE-10 C/CS to the DC support sleeve.
An attachment set (part no. 773 541 44) is needed for connection of the DST to the DC support sleeve.

DSC / DSC-S re-inforced strain relief

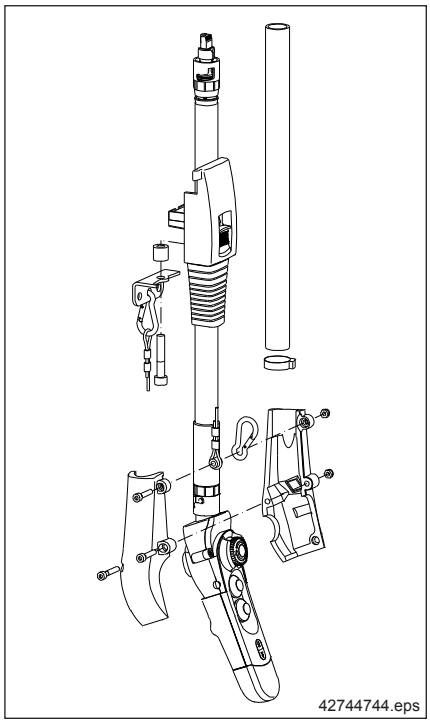

For particularly arduous operating conditions, an additional strain relief can be fitted per rope or chain (part no. 773 575 44) on DSC / DSC-S control pendants.

For further information, please refer to the 'DSC strain relief device assembly instructions', table page 17.

2TY cable

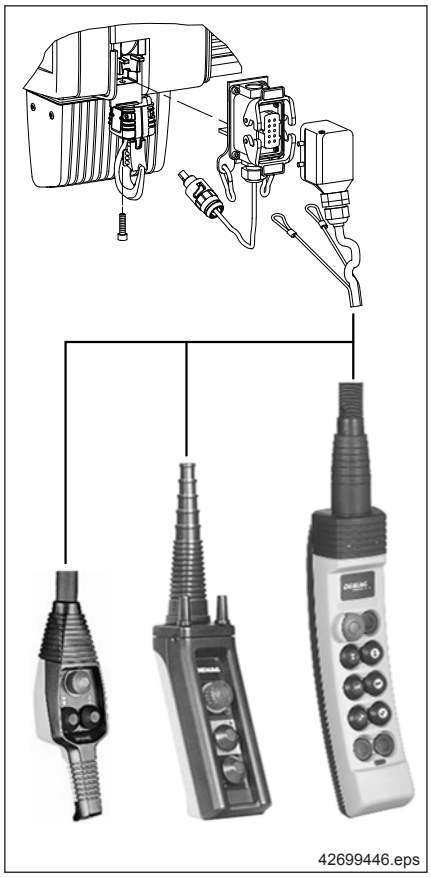

The 2TY control cable is available as an alternative to the DC support sleeve for the same applications.

As standard the 2TY control cable is used for control cable length longer than H11. The cable consists of an inner signal cable and two strain relief wire cords of steel fixed on the outside.

Lengths smaller than H11 are possible, the max. length is H30. For control cable lengths longer than H30 we recommend the use of a radio control system.

The 2TY control cable is fitted on the chain hoist via a Harting connector, as standard.

The 2TY cable can be combined with:

- DSC / DSC-S / DSE-10C/CS
- DST-3/7/9C/CS / DSK-3C/CS

Designation	Weight [kg]	Part no.
2TY control cable (10x1,5 mm^2) 1)	0,39 kg/m	792 633 44

1) An attachment set (part no. 773 371 44) is needed for connection of the DSE-10 C/CS to the 2TY cable.

Control pendants

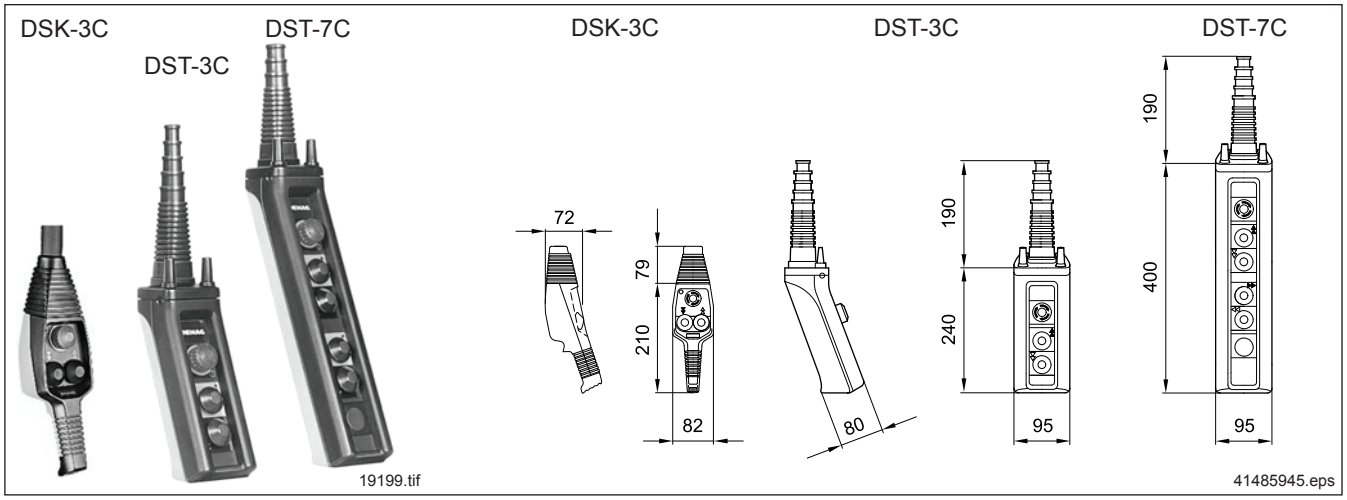

Designation	Axes	Can be fitted to	Cannot be fitted to	Part no.
DSK-3C 2)	1	DC support sleeve and 2TY cable	Height-adjustable standard DC control cable	773 550 44
DSK-3CS 2)				773 551 44
DST-3C	1			773 530 44
DST-7C 22	2			773 544 44
DST-7C 222	3			773 546 44
DST-3CS	1			773 535 44
DST-7CS 22	2			773 547 44
DST-7CS 222	3			773 548 44

2) An attachment set (part no. 773 553 44) is needed for connection of the DST to the 2TY cable.

5.6 Plug-and-socket connectors

1) An attachment set is needed to connect DSE-10C/CS or DSK-3C/CS units to the 2TY control cable.

DC chain hoists are fitted with plug-and-socket connectors for the power supply connection, control cable, control pendant and trolley connection interfaces as standard. The following optional plug connections may be used or required for certain applications.

Item	Designation	Part no.	Weight [kg]
1	Harting plug connector (6-pole) for power supply for DC 1 - 15 (fitted on the service cover side)	716 350 45	0,720
Not shown	Harting plug connector (6-pole) for power supply for DC 1 - 15 (fitted on the control pendant side)	720 266 45	0,850
	Harting plug connector (6-pole) for power supply for DC 16 - 25	720 265 45	0,950
2	Harting signal plug connection for attachment to the gearbox housing	720 170 45	0,540
3	Harting plug for 2TY control cable attachment set	720 172 45	0,270
4	2TY control cable (10x1,5 mm^2) 1)	792 633 44	0,39 kg/m
Not shown	Harting plug for DC support sleeve (for 720 170 45) incl. attachment material	720 171 45	0,390

Harting plug connector for power supply

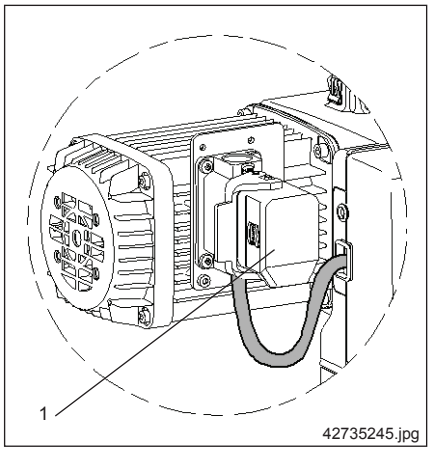

A Harting plug connection can also be additionally used for the power supply as an option. This is fitted to the motor side of the chain hoist, provided no geared limit switch, DRC-DC radio control or electric enclosure is fitted there. Alternative mounting position on request

Harting plug connector for control cable

The height of the standard control cable length is adjustable up to 9,8 m (hook path H11) and is connected to the DSC / DSC-S or DSE-10C/CS control pendant. A 2TY control cable is used for control cable lengths longer than 9,8 m (hook path longer than H11). This is bolted to the gearbox housing by means of a Harting plug connection. DSK, DST or DSE-10 control pendants are used.

Example for fitting a Harting connector to a DC 5 chain hoist with 2TY control cable

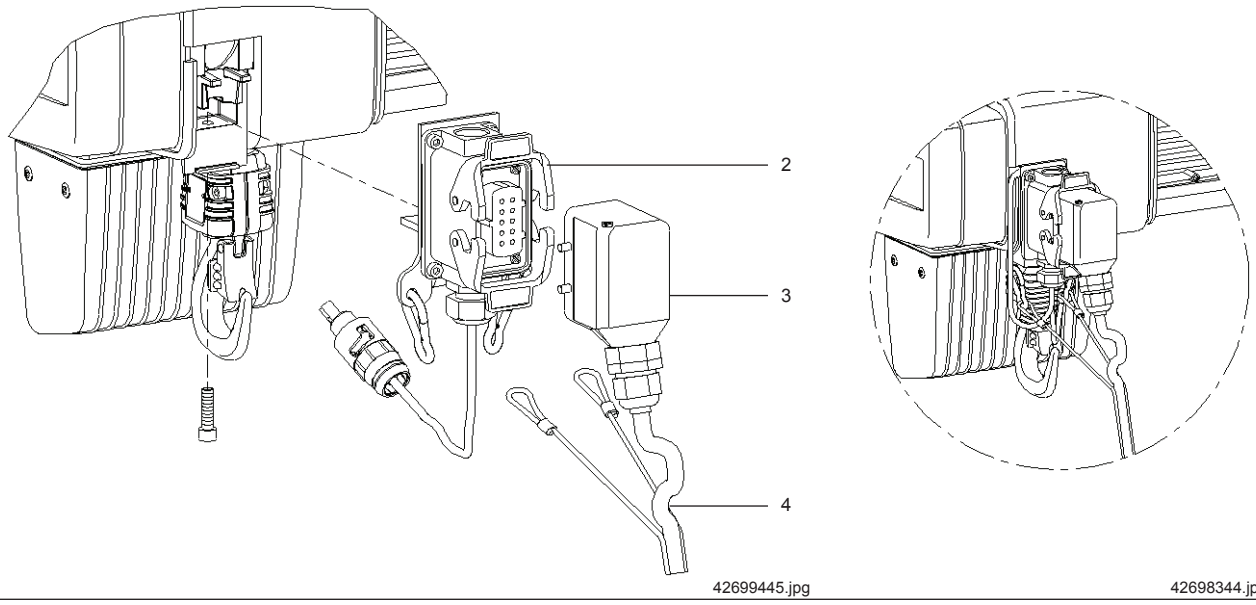

5.7 Control pendant accessories

5.7.1 Wall bracket, bumper

A **wall bracket** can be used for stationary chain hoists or as a parking position for the control pendant.

A **bumper** can be used to protect DSE-10C/CS units against impacts or a silicone protective case for particularly arduous ambient conditions.

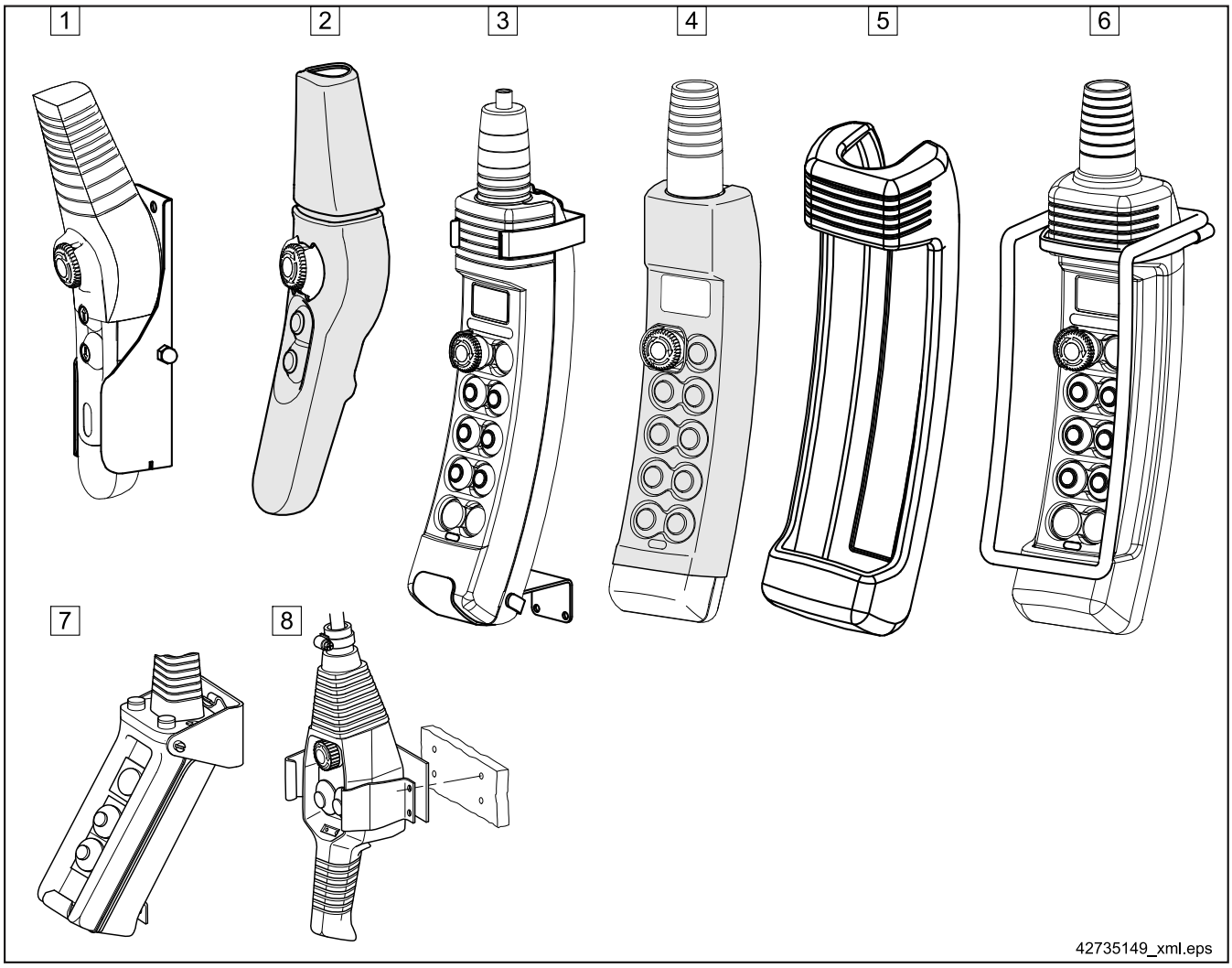

Item	Designation		Part no.	Weight [kg]
1	Wall bracket	DSC / DSC-S	773 570 44	0,245
2	Protective case		773 308 44	0,093
3	Wall bracket	DSE-10C/CS	772 790 44	0,500
4	Protective case		773 780 44	0,120
5	Rubber bumper		772 805 44	0,600
6	Bar to guard the pushbutton panel		720 095 45	1,200
7	Wall bracket	DST	874 400 44	0,800
8		DSK-3C/CS	874 768 44	0,155

5.7.2 Control pendant jib

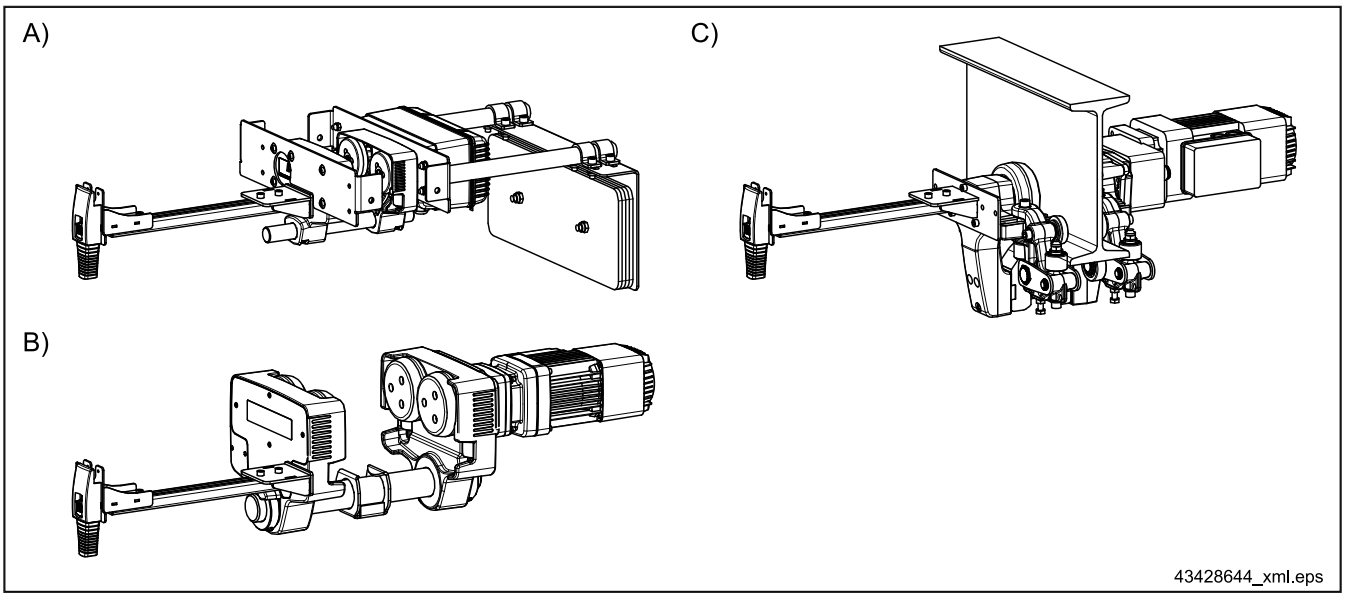

Item	Designation		Part no.
A)	Control pendant jib	EU11 - EU34	748 561 46
B)		EU56	
C)		Articulated trolley	750 060 46

For frequent handling of awkward loads, it is useful to use a control pendant jib in order to avoid collision of the control cable with the load or even damage by the load.

The standard height-adjustable control cable, the DC support sleeve or the Harting plug fitting can be used with the control pendant jib. For selecting the control cable length, the distance between the fixing point of the control cable and the chain hoist must be taken into account in addition.

The jib length may vary between 300 mm and 2500 mm, the appropriate counterweight fittings must be provided depending on the jib length.

Please pay attention to the control cable design, use other non-standard control cable, as required, e.g. 2TY cable.

5.8 Radio control systems

Safety requirements

Optionally, an emergency control system in the form of a second hand-held transmitter or a separately connected control pendant can be fitted if the radio control system fails.

In order to satisfy the safety requirements of the Machinery Directive, the following additional devices are required when radio control systems are operated:

- Long and cross-travel limit switches;
- Travel path limiters, e.g. clamp-fitted buffers;
- Horn (already included in the standard DRC-DC scope of delivery);
- Crane identification;
- For DC chain hoists in crane installations: Red warning lamp activated as long as the wireless control system is switched on.

The crane identification (the crane code/number in the form of coding labels) on the travelling hoist or crane must match the crane identification shown in the display of the hand-held transmitter. This is designed to facilitate distinct identification/assignment of the travelling hoist/crane to the hand-held transmitter.

To show a digit of the crane ID on the hoist / crane:

Black coding label part no. 895 639 44

7-segment coding label part no. 895 640 44.

Properties

When radio control systems are used, the following must be observed:

Up to 10 DRC-DC radio control systems can be operated simultaneously and in parallel within a radius of approx. 300 m without the need for any further measures. Contact the manufacturer for operation of more than 10 radio control systems.

Demag DRC radio control systems are designed for wireless control of DC chain hoists. They are the interface for manually controlled DC chain hoists and DC crane installations.

Transmitters and receivers of the DRC range can be operated without any registration or operating fee.

The DRC-DC and DRC-MP systems are designed for the 433 MHz ISM band frequency range and the versions for the 900 MHz ISM range, which is exclusively provided for use in North and South America. Pay attention to the appropriate postal authority approval.

For further information, please refer to the 'DRC-DC radio control system assembly instructions', table page 17.

5.8.1 Radio control accessories

Item	Designation	Part no.	Weight [kg]
1	Wall bracket for DRC-DC 6 / DRC-DC 10 transmitter	773 688 44	0,164
2	Silicone protective case for DRC-DC 6	773 680 44	0,085
	Silicone protective case for DRC-DC 10	773 580 44	0,105
3	Carrying bag for DRC-DC 6 with shoulder strap and belt clip	773 433 44	0,100
	Carrying bag for DRC-DC 10 with shoulder strap and belt clip	773 434 44	0,120
4	Plug-in charger (no battery) with Europe plug 110-230 V 50/60 Hz, frequency range 433 MHz	773 438 44	0,140
	Plug-in charger (no battery) with plug for USA 110-230 V 50/60 Hz, frequency range 900 MHz	773 446 44	0,140
5	Rechargeable battery pack ‘ReCyko’; 2 x 2050 mAh	773 499 44	0,060

5.8.2 DRC-DC radio control system

The Demag DRC-DC chain hoist radio remote control system is the ideal solution for optimum ergonomic operation of pole-changing DC chain hoists. It offers much greater flexibility than cable-connected control systems and ensures that the operator can maintain a safe distance from the load at all times.

With transmitters available in two sizes, up to two (DRC-DC 6) or three motion axes (DRC-DC 10) can be controlled.

For chain hoist sizes DC 1 - 15, the receiver is integrated into a housing which is attached to the outside of the chain hoist. Pre-assembled cables facilitate quick and easy connection to the hoist, crab or crane electric equipment. For chain hoist sizes DC 16 and DC 25, the receiver is inserted into the corresponding slot beneath the chain hoist electric equipment cover.

The DRC-DC radio control system has the following properties:

- Simple wireless hand-held transmitter log-on;
- Reliable radio transmission thanks to frequency hopping (no fixed frequency);
- Display section for operating statuses and battery capacity;
- Stop function according to safety category 3 / EN 954.

The red warning lamp stipulated by EN 15011 for crane installations but not for travelling hoists must be ordered in addition, as it is not included in the DRC-DC scope of supply.

Designation	Type	Chain hoist size	Part no.	
			433 MHz	900 MHz
Receiver set	DRC-DC 6	DC 1-15	773 740 44	773 830 44
Transmitter			773 400 44	773 800 44
Receiver set	DRC-DC 10	DC 1-15	773 745 44	773 840 44
Transmitter			773 700 44	773 810 44
Receiver	DRC-DC 6	DC 16-25	773 720 44	773 820 44
Transmitter			773 400 44	773 800 44
Dummy plug			720 348 45	
Signal horn			720 349 45	
Receiver	DRC-DC 10	DC 16-25	773 720 44	773 820 44
Transmitter			773 700 44	773 810 44
Dummy plug			720 348 45	
Signal horn			720 349 45	
Crane plug connector			720 365 45	

DRC-DC 6 hand-held transmitter

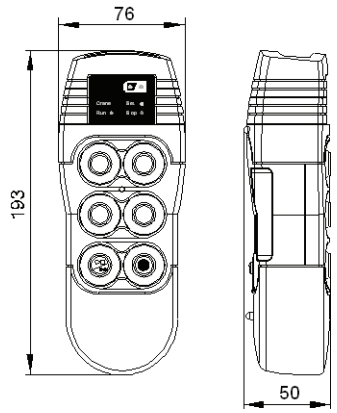

DRC-DC 10 hand-held transmitter

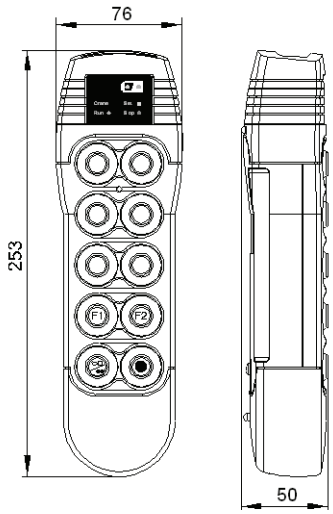

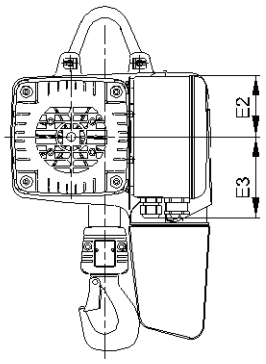

DRC-DC receiver mounting example

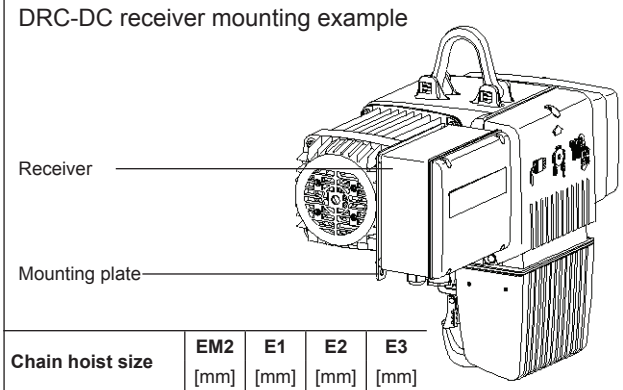

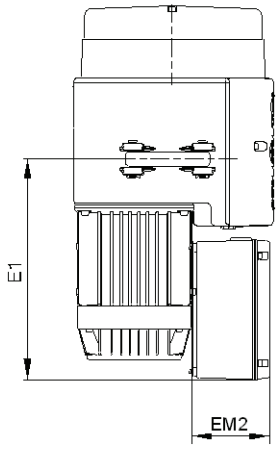

Chain hoist size	EM2 [mm]	E1 [mm]	E2 [mm]	E3 [mm]
DC 1/2	105	286	66	123
DC 5		292	82	107
DC 10		294	102	87
DC 15				
DC 16 - 25			82	107

42735344.jpg

DRC-DC 6 pushbutton transmitter
- Six buttons for two-stage control of up to two motion axes
- Horn test button
- Stop button
- Weight incl. rechargeable battery 410 g
- IP 55 type of enclosure
- Temperature range -20 to +50 °C
- Max. range 50 m
- Frequency range 433.100-434.750 MHz and 900 MHz for USA / Canada
- 10 mW (ERP) transmission output

DRC-DC 10 pushbutton transmitter
- Ten buttons for two-stage control of up to three motion axes
- Horn test button
- Stop button
- 2 pushbuttons for special functions
- Weight incl. rechargeable battery 490 g
- IP 55 type of enclosure
- Temperature range -20 to +50 °C
- Max. range 50 m
- Frequency range 433.100-434.750 MHz and 900 MHz for USA / Canada
- 10 mW (ERP) transmission output

DRC-DC receiver for external attachment to a DC 1 - 15 chain hoist
- E-box incl. transformer board
- Adapter plate and installationmaterial
- Pre-assembled power and control cables for connection to the chain hoist or crane
- Integrated horn
- 24 V AC supply voltage
- Type of enclosure IP 55
- Temperature range -20 to +60 °C

DRC-DC receiver for DC 16 - 25
- Receiver board for installation in DC chain hoists
- Integrated horn
- Power supply via the DC 16 - 25 electric equipment
- Dummy plug for electric equipment cover
- Crane plug connector (only for crane axis)

5.8.3 DRC-MP radio control system

The Demag DRC-MP multi-purpose radio remote control system can be used as an alternative to the DRC-DC system for the following applications:

- For infinitely variable control of up to three motion axes. The receiver has a PWM interface to control the variable-speed chain hoist or the travel drives;
- If a DRC-J joystick transmitter is to be used instead of a pushbutton transmitter;
- For installations with crane/crab switchover via F1 or F2 function keys that each control a changeover contact (relay) on the receiver side;
- For use of up to 3 digital feedback channels to display status information (select crab 1 / 2) or warning information.

The DRC-MP radio control system gives you the choice between the DRC-10 key-actuated transmitter and the DRC-J joystick transmitter, which can be practically suspended on a strap.

Both are suitable for universal application to control installations with up to three motion axes.

The radio control system has the following properties:

- Automatic adaptive frequency management;
- Bi-directional signal transmission;
- Graphic display showing battery capacity and installation status or warning messages;
- Stop function according to safety category 3 / EN 954;
- Infinitely variable pushbuttons or infinitely variable joystick elements;
- Wireless transmitter log-on.

The red warning lamp stipulated by EN 15011 for crane installations but not for travelling hoists must be ordered in addition, as it is not included in the DRC-DC scope of supply.

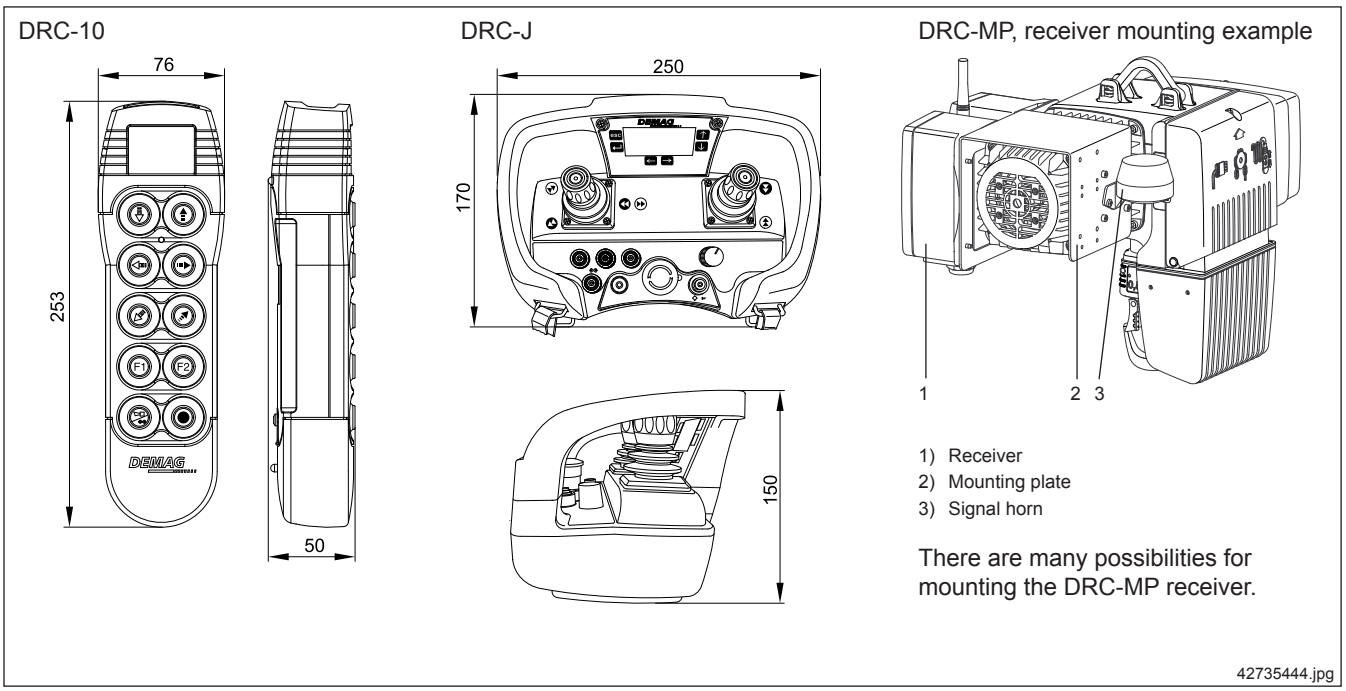

DRC-10 pushbutton transmitter

- 6 infinitely variable pushbuttons (for infinitely variable or 2-stage control of up to three axes)
- Horn / limit switch test button
- Stop button
- 2 pushbuttons for special functions
- Weight incl. rechargeable battery: 500 g
- IP 55 type of enclosure
- Temperature range -20 to +50 °C
- Range max. 100 m
- Frequency range 433.100-434.750 MHz and 900 MHz for USA / Canada
- 10 mW (ERP) transmission output

DRC-J joystick transmitter

- 1 joystick for lifting/lowering axis
- 1 joystick for two axes (cross and long travel)
- 1 horn/start button
- 1 limit switch test button
- 2 pushbuttons for special functions
- Mechanical key-operated switch to turn the transmitter on and off
- Weight incl. rechargeable battery: 1800 g
- IP 55 type of enclosure
- Temperature range -20 to +70 °C
- Range max. 100 m
- Frequency range 433.100-434.750 MHz and 900 MHz for USA / Canada
- 10 mW (ERP) transmission output

DRC-MP receiver

- Supply voltage 42-240 V AC, +/- 10 %, 50/60 Hz
- Output relay for 250 V, 8 A, AC11
- PWM outputs
- 3 digital feedback channels
- Power consumption rating 12 VA
- IP 65 type of enclosure
- Temperature range -20 to +60 °C
- Horn, not included in the scope of delivery (separate power supply required)
- Receiver enclosure fitted to the chain hoist, crab or crane bridge enclosure
- Enclosure size, Width x Depth x Height in mm: 256 x 104 x (183 + 70 mm aerial)

5.9 IR infrared control system

The Dematik IR infrared control system is an alternative to DRC-DC and DRC-MP radio control systems with the following properties:

- Safety thanks to limited range (max. 40 m);
- In the close range (up to 15 m), no alignment of the transmitter to the sensor is required;
- Users not exposed to high frequency;
- No problems with interference of transmitter frequencies, if radio control systems operate on the same frequencies;
- In most cases, no travel limit switches are required owing to the limited range (the operator walks alongside during operation).

Receiver enclosure

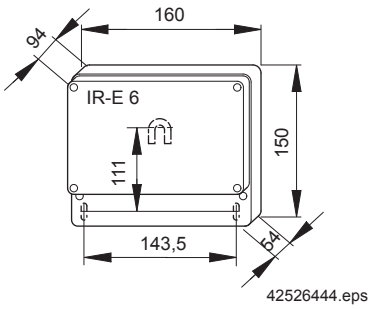

IR-L charger

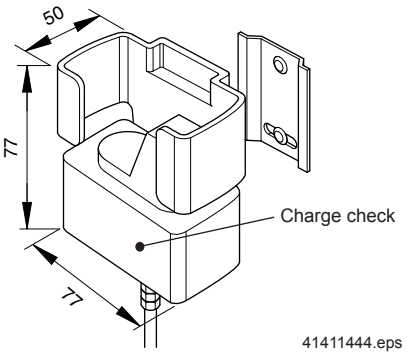

IR-H infrared transmitter

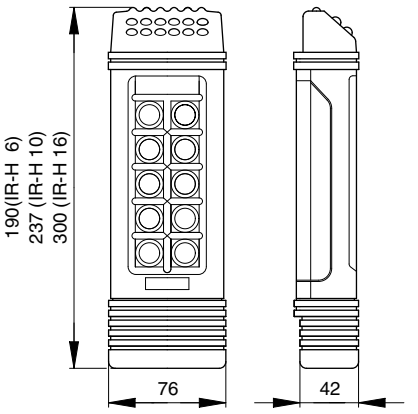

IR-S infrared sensor

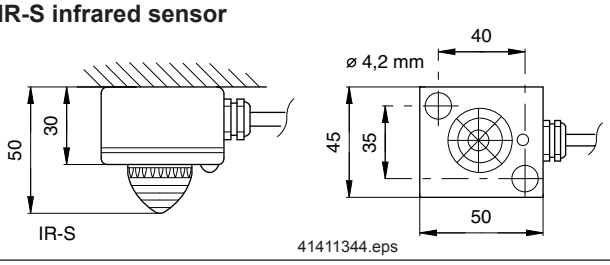

6 Manulift

6.1 Selection criteria

DCM-Pro 1-5, DCMS-Pro 1-2 Manulift

DCRS-Pro 1 - 2 rocker switch

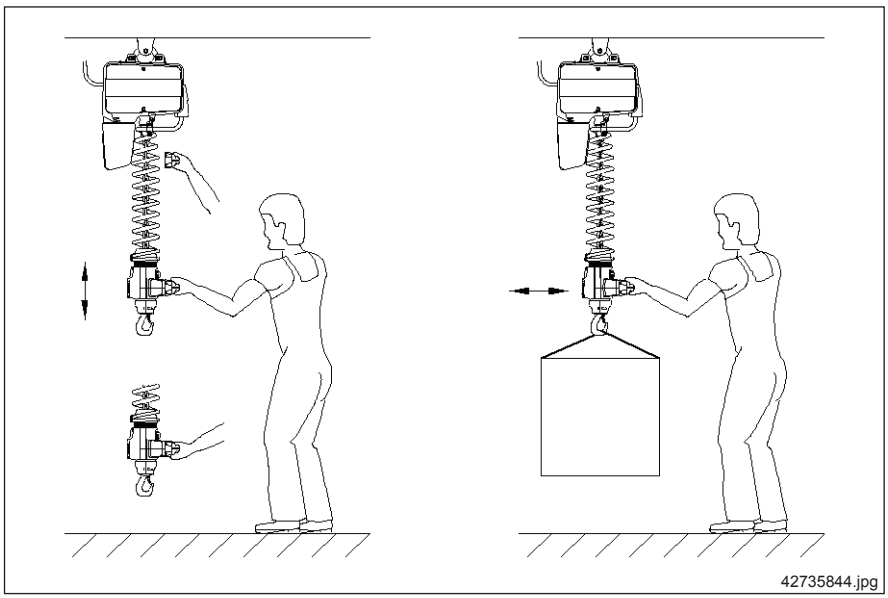

DSM-C/CS control handle

Hand in horizontal position

Maximum possible range and, therefore, lifting height.

Simple application of large forces for pushing and pulling suspended loads.

DCRS-Pro rocker switch

Hand in vertical position

Precise guidance of the load and load handling attachment, particularly for rigid guidance, e.g. C-hook or similar items and, therefore, rapid load pick-up.

The operating element of the DCRS-Pro rocker switch is designed with IP 34 type of enclosure.

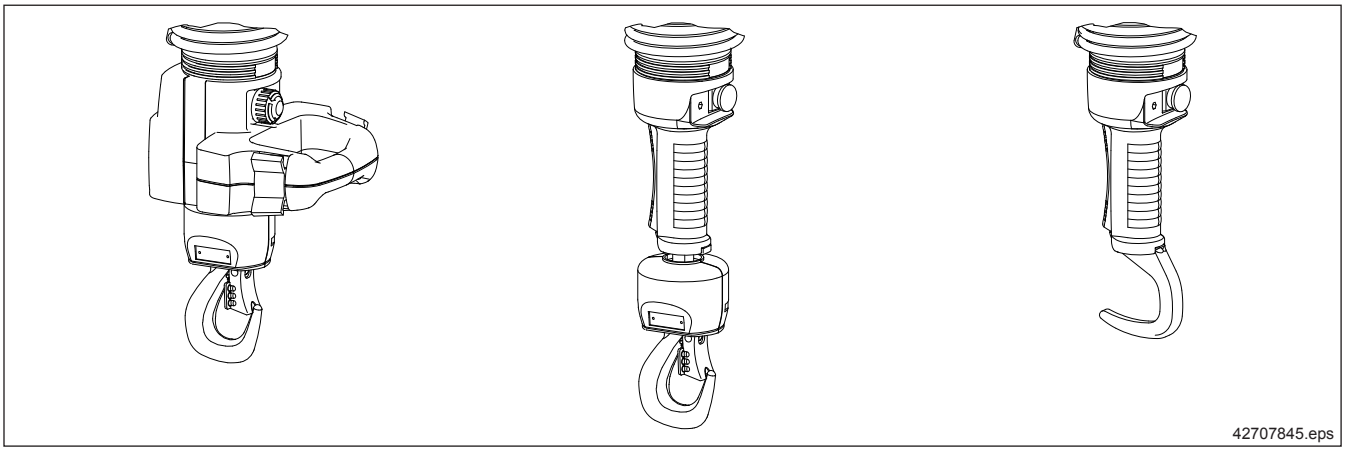

6.2 Dimensions

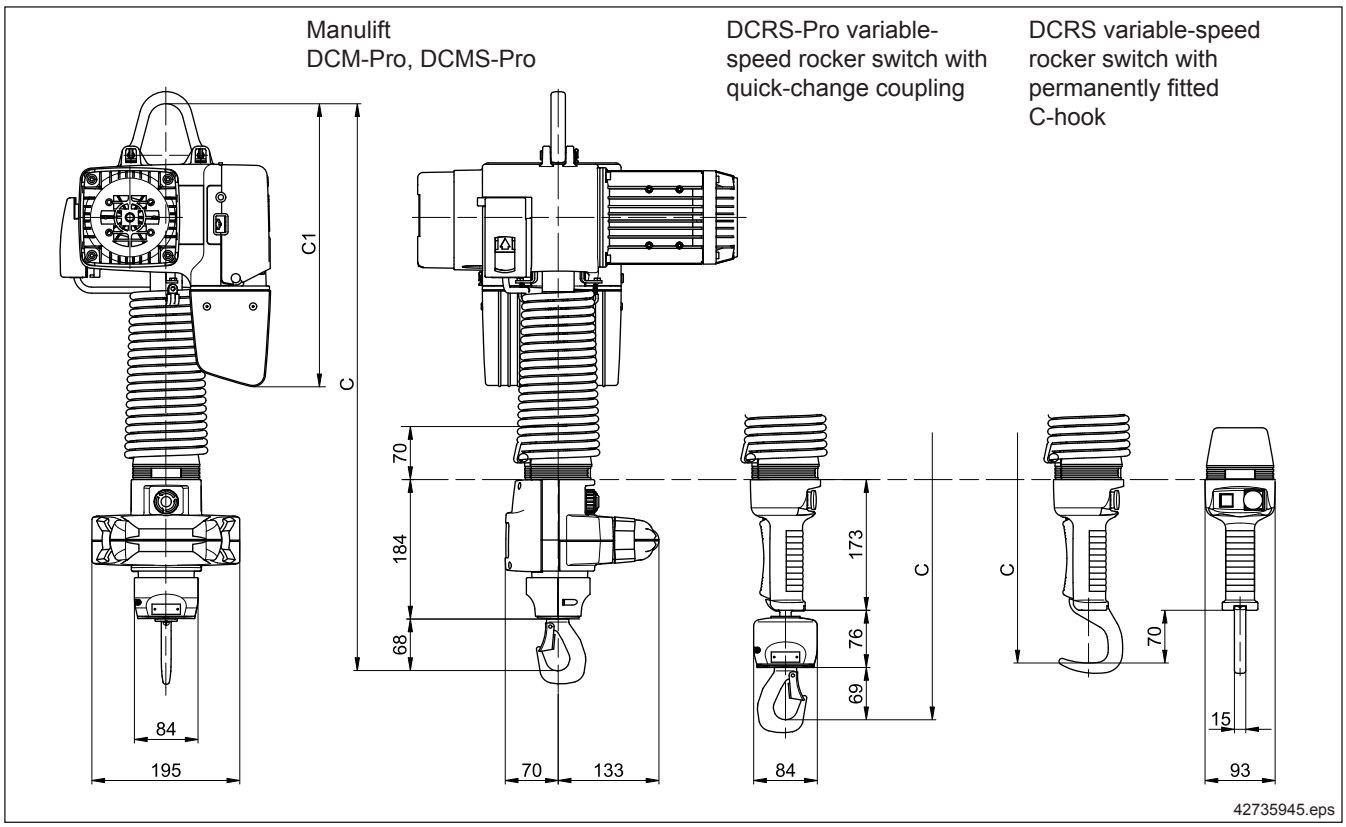

1) For chain hoists fitted with a short suspension bracket, dimension C is reduced by 38 mm.

Chain hoist size	C1 Chain collector H5	C 1) for hook path 2,8 m	4,3 m
DCM-Pro 1 / 2, DCMS-Pro 1 / 2	373	694	764
DCM-Pro 5	435	746	816
DCRS-Pro 1 / 2 with quick-change coupling	373	754	824
DCRS-Pro 1 / 2 with permanently fitted hook		685	755

Manulift

Pillar and wall-mounted slewing jib crane for Manulift

KBK 100

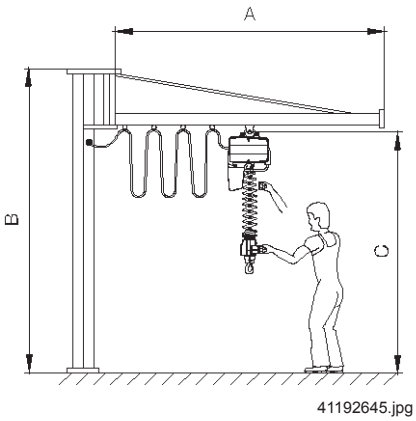

Slewing range **KBK 100 : 270°**
KBK I : 300°

Suitable for Manulift	DCM-Pro 1 - 80	DCM-Pro 1 - 125 DCM-Pro 2 - 125 DCM-Pro 2 - 250
	DCMS-Pro 1 - 80	DCMS-Pro 1 - 125 DCMS-Pro 2 - 250
	DCRS-Pro 1 - 80	DCRS-Pro 1 - 125 DCRS-Pro 2 - 250
Dimensions [m]	KBK 100	KBK I
A	2,02	2,03
	3,02	3,03
	-	4,03
B	3,00	3,02
C	2,61	2,47
D	0,58	0,76

KBK I

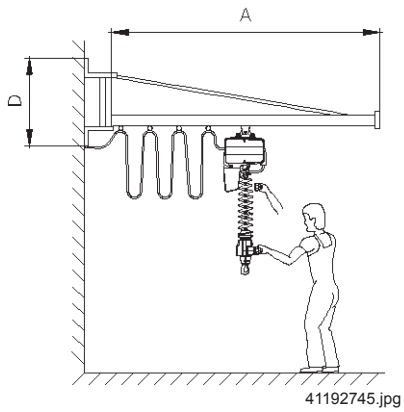

Slewing range **KBK 100 : 270°**
KBK I : 270°

For further information, please refer to the 'SSK+WSK KBK cranes technical data' and 'KBK classic technical data', table page 17.

20352544.indd/180713

6.3 Accessories for DC units with quick-change coupling

Max. load capacity 250 kg

6.3.1 Load handling attachments

The quick-change coupling on **DSM-C/CS** and **DCRS-Pro** control units is used for rapidly changing various load handling attachments.

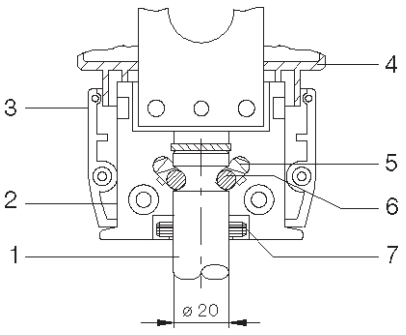

41089844.jpg

1 Load hook
2 Load retainer
3 Unlocking sleeve
4 **DSM-C/CS** control unit housing lower part
5 Pressure spring
6 Cylindrical pins (2 x) for holding the load
7 Swivel lock

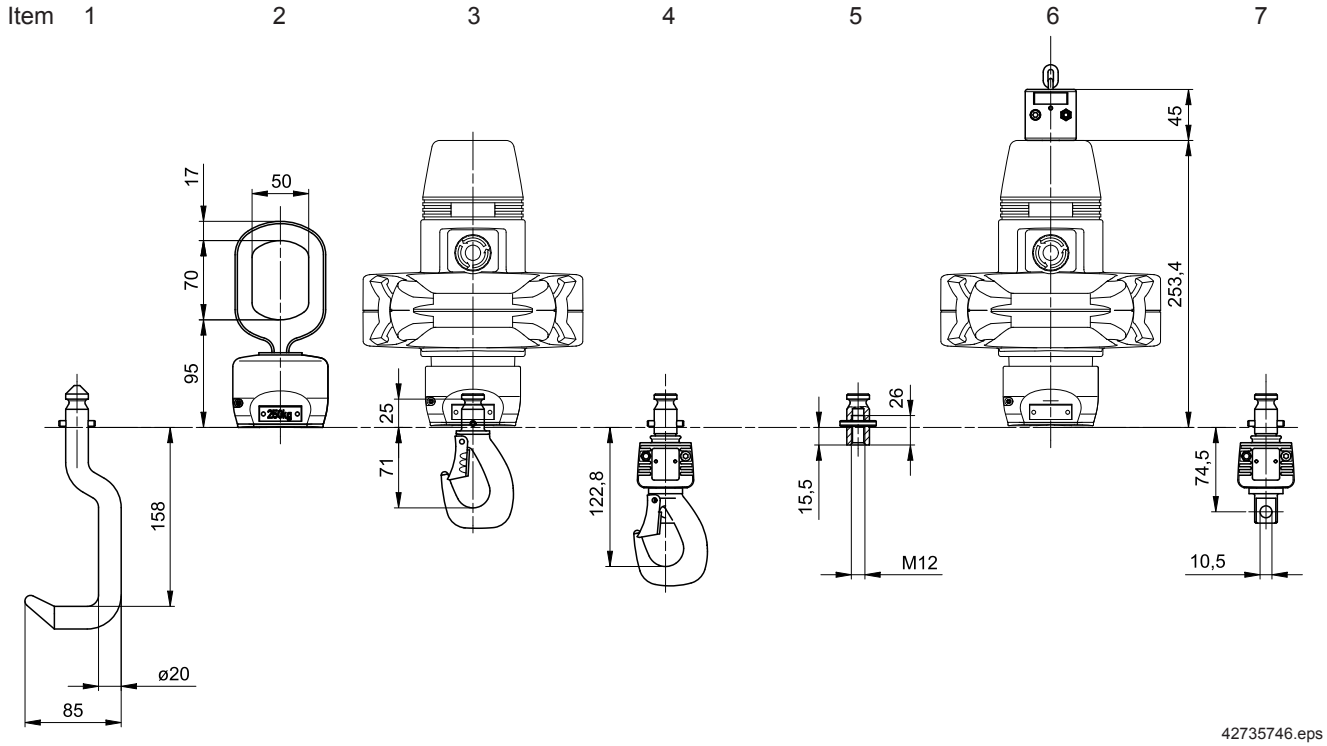

42735746.eps

Item	Designation	Description	Load capacity [kg]	Part no.	Weight [kg]
1	Open hook		125	565 695 44	0,651
2	Crane hook adapter with quick-change coupling	The adapter for the crane hook also makes it possible to use Manulift load handling attachments on other hoists.		718 332 45	0,950
			250	718 333 45	
3	Load hook	Included in the standard scope of delivery		835 665 44	0,317
4	Swivelling load hook			835 584 44	0,608
5	Coupling pin	For fitting individual load handling attachments		835 580 44	0,084
6	Manulift articulated joint	The articulated joint prevents the chain from twisting between the chain hoist and the Manulift control unit (included in the standard scope of delivery).		835 669 44	0,324
7	Pantograph tongs swivel adapter	The swivel adapter for SZ 1 + 2 pantograph tongs enables the tongs to be turned freely on the DSM-C/CS Manulift control unit.		717 330 45	0,419

6.3.2 Chain swivel joint

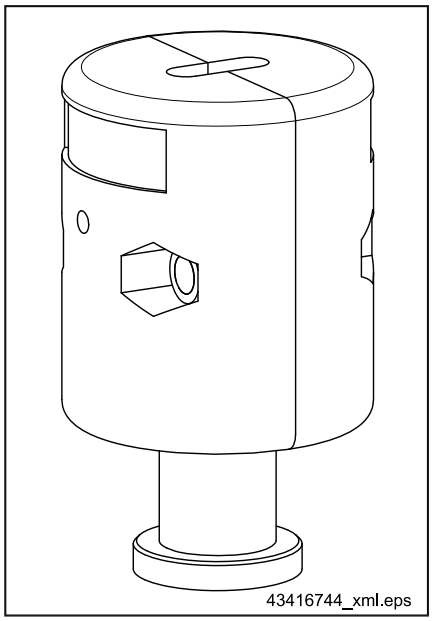

Designation	Chain hoist size	Part no.	Weight [kg]
Chain swivel joint for DSM-C Manulift	DCM 1+2	717 306 45	0,300
	DCM 5	718 306 45	0,300

In order to prevent premature wear of the chain/chain entry plate when the Manulift handle is turned in normal operation in connection with low suspension heights, a chain swivel joint is fitted as standard from year of construction 04/2009.

Older Manulift units can be refurbished.

For further information, please refer to the 'DCM-Pro, DCMS-Pro, DKM, PM, PMV chain swivel joint assembly instructions', table page 17.

6.4 Pantograph tongs

Load capacity up to 125 kg

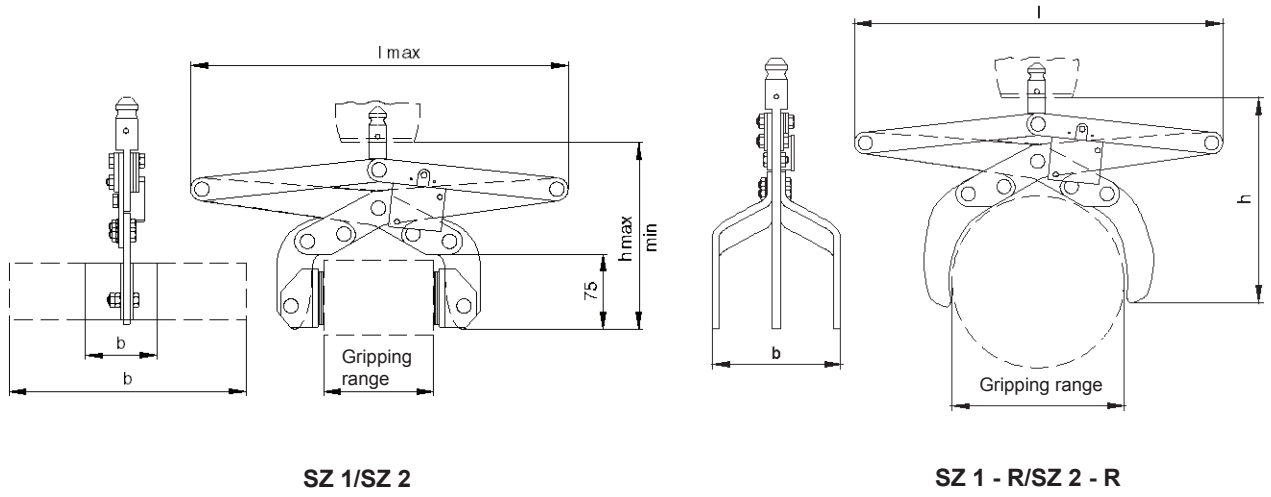

Range	Gripping range	b	l max	h min	h max	Size	Part no.	Weight
		[mm]						[kg]
SZ 1	60 - 80	60	368	190	265	**SZ 1-08-1**	565 701 44	3,5
	80 - 105					**SZ 1-10-1**	565 601 44	
	105 - 130					**SZ 1-13-1**	565 702 44	
	130 - 155					**SZ 1-15-1**	565 602 44	3,7
	155 - 180					**SZ 1-18-1**	565 703 44	
	180 - 205					**SZ 1-20-1**	565 603 44	
	60 - 80	200		190	265	**SZ 1-08-2**	565 704 44	4,3
	80 - 105					**SZ 1-10-2**	565 604 44	
	105 - 130					**SZ 1-13-2**	565 705 44	
	130 - 155					**SZ 1-15-2**	565 605 44	4,5
	155 - 180					**SZ 1-18-2**	565 706 44	
	180 - 205					**SZ 1-20-2**	565 606 44	
	dia. 40 - 150	120		225	420	**SZ 1-R-15**	565 608 44	4,0
SZ 2	140 - 210	60	519	190	415	**SZ 2-21-1**	565 712 44	4,7
	210 - 275					**SZ 2-27-1**	565 612 44	
	275 - 340					**SZ 2-34-1**	565 613 44	
	140 - 210	200		190	415	**SZ 2-21-2**	565 715 44	5,4
	210 - 275					**SZ 2-27-2**	565 615 44	
	275 - 340					**SZ 2-34-2**	565 616 44	5,7
	dia. 100 - 300	160		325	620	**SZ 2-R-30**	565 618 44	5,3

Example

1 x pantograph tongs SZ 1-10-1 Part no. 565 601 44

Order for a set of pantograph tongs comprising pantograph hinges 1, clamping lever size 10 for 80 - 105 mm gripping range and clamping jaws 1, width b = 60 mm.

Pantograph tongs basic module for 125 kg / 250 kg load capacity

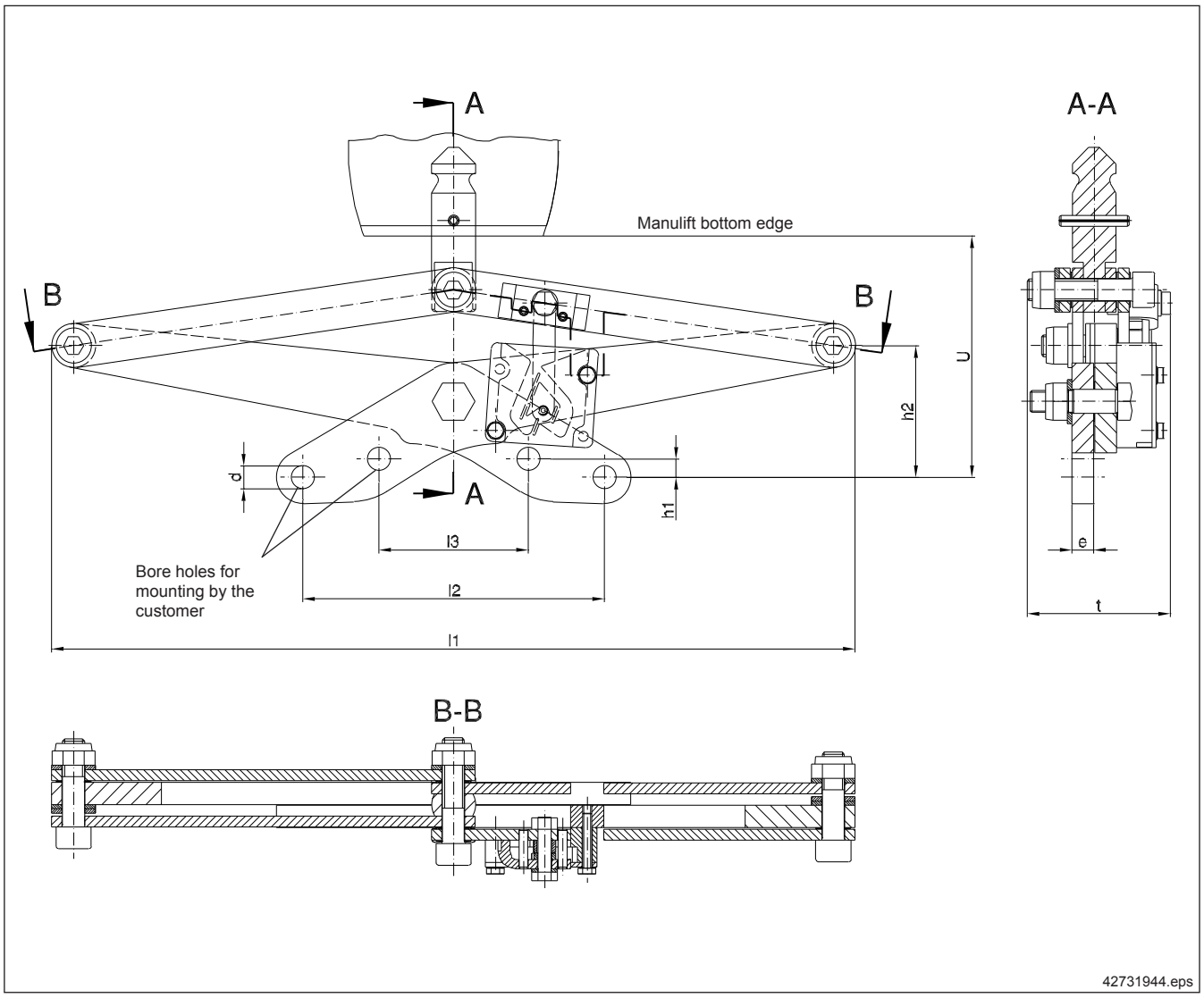

Range	Load capacity [kg]	l1 [mm]	l2 [mm]	l3 [mm]	d [mm]	e [mm]	t [mm]	h1 [mm]	h2 [mm]	U [mm]	Part no.	Weight [kg]
SZ 1	125	278 - 368	75 - 140	27 - 70	10,5	10	65	26 - 7	186 - 52	330 - 111	565 620 44	2,450
	250	312 - 372	111 - 160	28 - 60	12,5	12	79	28 - 5	166 - 52	292 - 117	588 272 46	3,600
SZ 2	125	318 - 519	69 - 194	25 - 104	10,5	10	65	41 - 11	299 - 55	526 - 110	565 630 44	3,100

Properties

The basic module enables the customer to fit individual load handling attachments.

6.4.1 Clamping lever and clamping jaws, load capacity 125 kg

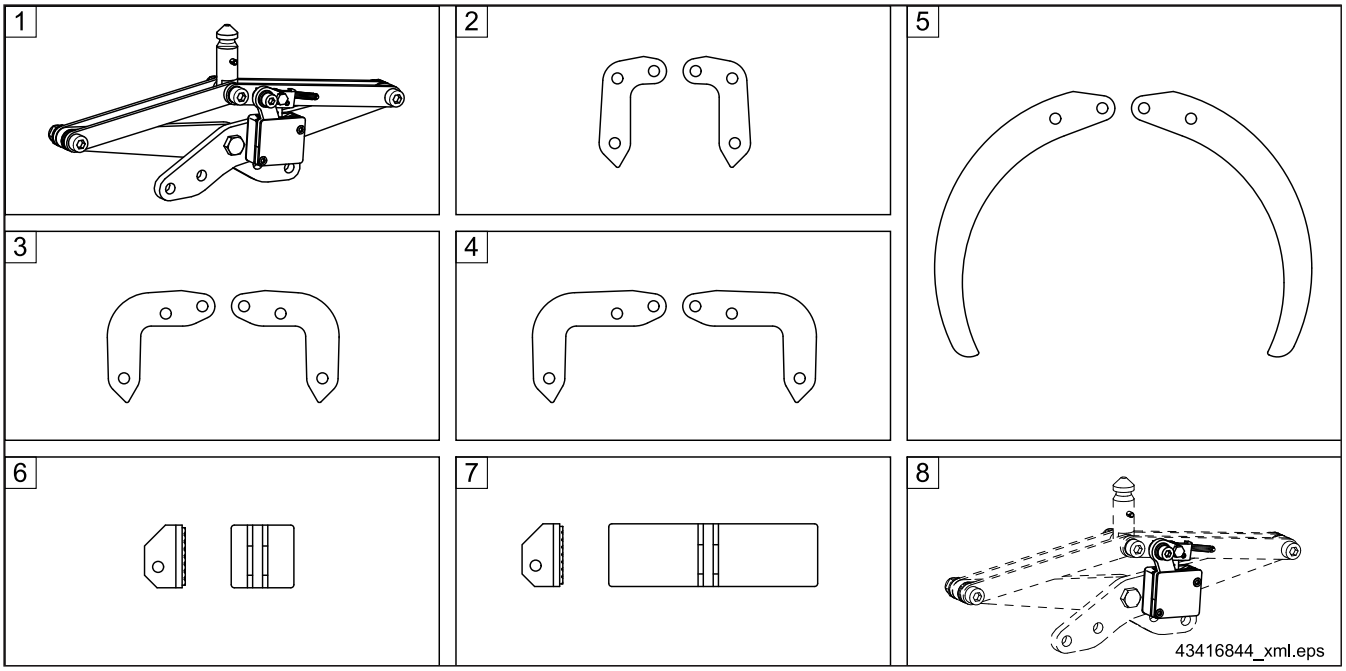

Item	Designation	Load capacity [kg]	Type	Gripping range	Part no.
1	Pantograph tongs basic module	125	SZ 1		565 620 44
			SZ2		565 630 44
2	Clamping lever for SZ 1		08	60 - 80	565 740 44
			10	80 - 105	565 640 44
			13	105 - 130	565 744 44
3			15	130 - 155	565 644 44
4			18	155 - 180	565 748 44
			20	180 - 205	565 648 44
5			R15	dia. 40 - 150	565 652 44
3	Clamping lever for SZ 2		21	140 - 210	565 760 44
4			27	210 - 275	565 660 44
			34	275 - 340	565 664 44
5			R30	dia. 100 - 300	565 668 44
6	Clamping jaws		1	565 675 44	
7			2	565 680 44	
8	Coupling mechanism			565 638 44	

6.5 PGS parallel gripper system

For further information, please refer to the 'PGS parallel gripper operating instructions', table page 17.

6.5.1 Parallel gripper system for shafts, range W1 - W2

W1 range

The sliding jaw (left) is not fitted with a load support and is only approx. 17 mm thick. This range is therefore suitable for picking-up shafts which are positioned close together.

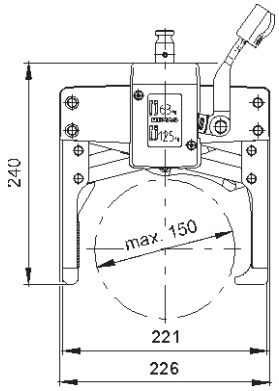

40974244.jpg

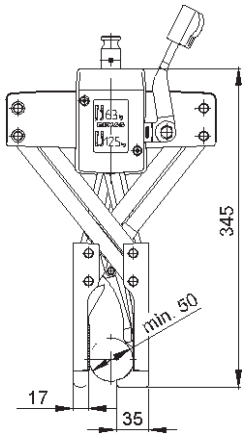

40974844.jpg

W2 range

Loads weighing up to 125 kg can be handled with this gripper; due to the wide jaws the load can also be lifted safely even when it is picked up off centre.

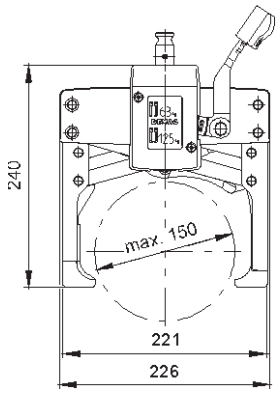

40974344.jpg

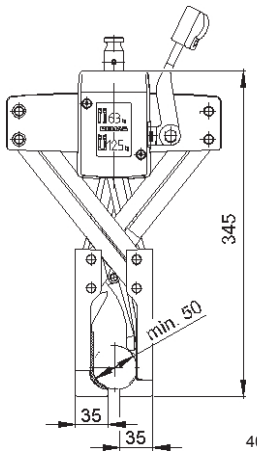

40974944.jpg

W3 range

With bore hole for splined shafts

Loads weighing up to 125 kg can be handled with this gripper. The load is picked up symmetrically. Long shafts and shafts with various diameters can be handled when used together with extension set 1.

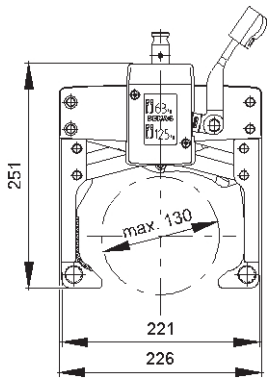

40974444.JPG

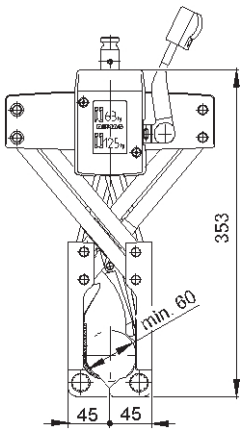

40975044.jpg

Range	Load capacity [kg]	Shaft diameter [mm]	Gripper jaw width [mm]	Max. shaft length [mm]	Load support	Part no.	Weight [kg]
W1	63	50 - 150	60	600	on one side	840 850 44	7,65
W2	125		120	-	on both sides	840 848 44	7,92
W3	125	60 - 130	60	-		840 849 44	7,77

Extension set 1 for shaft grippers

The working range of the parallel gripper system of the W3 range can be extended using the accessory set shown below.

By inserting the support shafts into the gripper jaws, fitting the support jaws to the support shafts and securing these items using grub screws, shafts with various diameters can also be handled in a horizontal position. Differences in diameter of up to 30 mm can be compensated by sliding and turning the support jaws on the shaft.

Example for fitting shaft gripper W3 with extension set 1

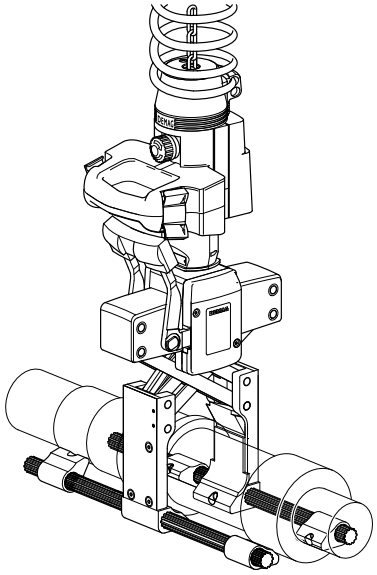

40982944.eps

Support shaft

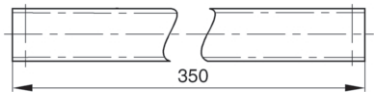

40975645.jpg

Support jaws

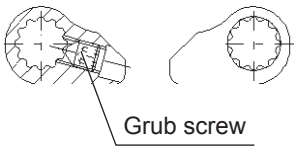

41268144.jpg

Designation	Part no.	Weight [kg]
PGS125 extension set	840 870 44	1,874

6.5.2 Parallel gripper system for shafts, special gripping range

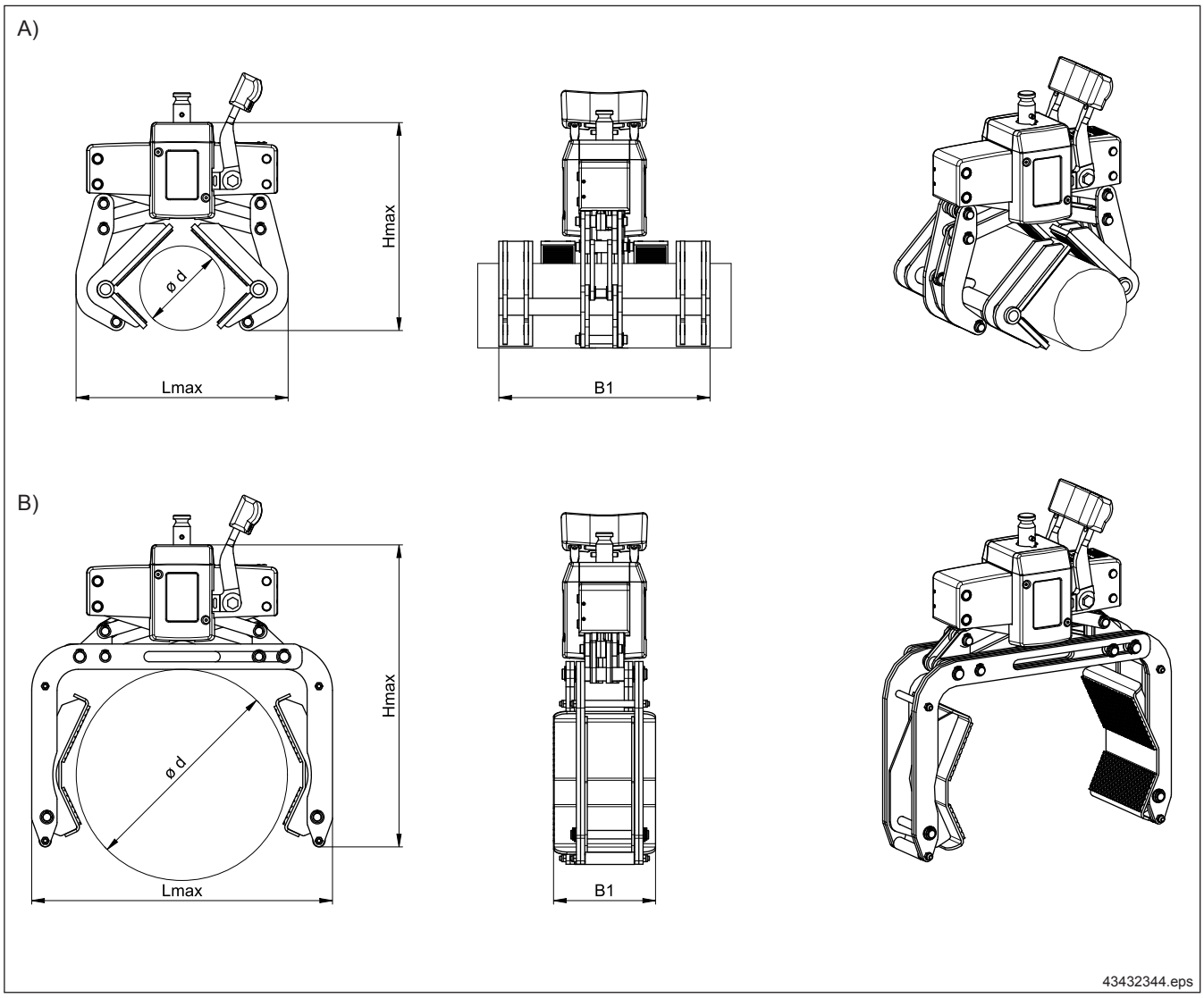

Item	Load capacity [kg]	Shaft diameter [mm]	B1 [mm]	Hmax [mm]	Lmax [mm]	Part no.	Weight [kg]
A)	125	30 - 100	250	253	230	588 776 46	11,0
B)		180 - 280	120	379	360	588 718 46	12,1

6.5.3 Parallel gripper system for containers with lifting slots

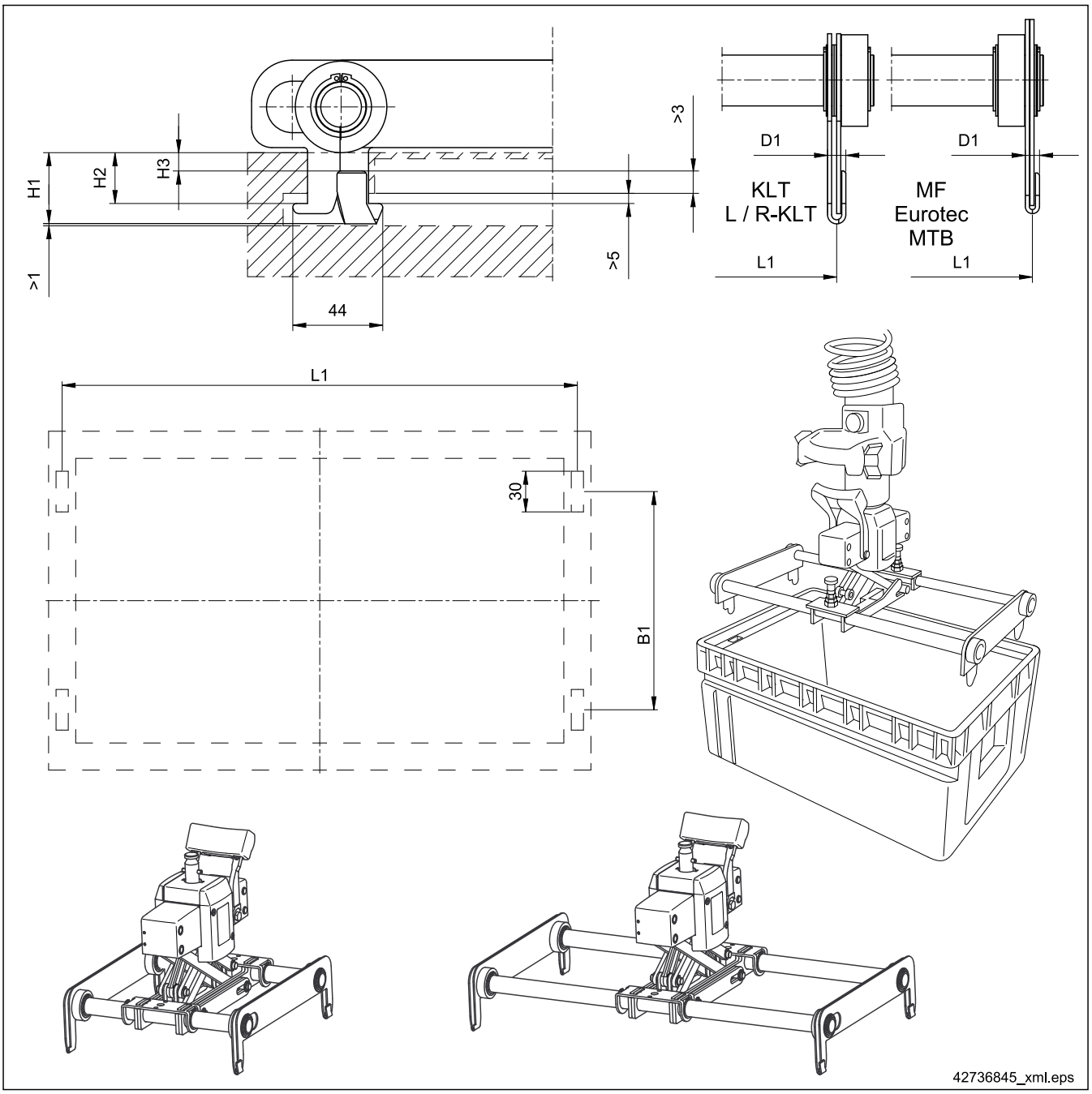

Container type	Load capacity [kg]	Container size [mm]		L1 [mm]	B1 [mm]	H1 [mm]	H2 [mm]	H3 [mm]	D1 [mm]	Part no.	Weight [kg]
MF	63	600 x 400	rigid	579	283	43	34	23	7	840 901 44	11,3
Eurotech				583		34	25	14	9	840 903 44	
KLT				553	211	48	38	22	9	840 905 44	11,8
L / R-KLT				565						840 907 44	11,5
MF		400 x 300		282	283	43	34	23	7	840 991 44	10,5
Eurotech				283		34	25	14	9	840 993 44	
KLT				355	211	48	38	22	9	840 995 44	11,2
L / R-KLT				367						840 997 44	11,0
KLT		600 x 400	adjustable	553						840 906 44	12,3
L / R-KLT				565						840 908 44	12,1

Dimensions > 1, > 3 and > 5 apply when the gripper rollers rest on the edge of the container.

Other container types on request.

6.5.4 Parallel gripper system for containers without any lifting slots

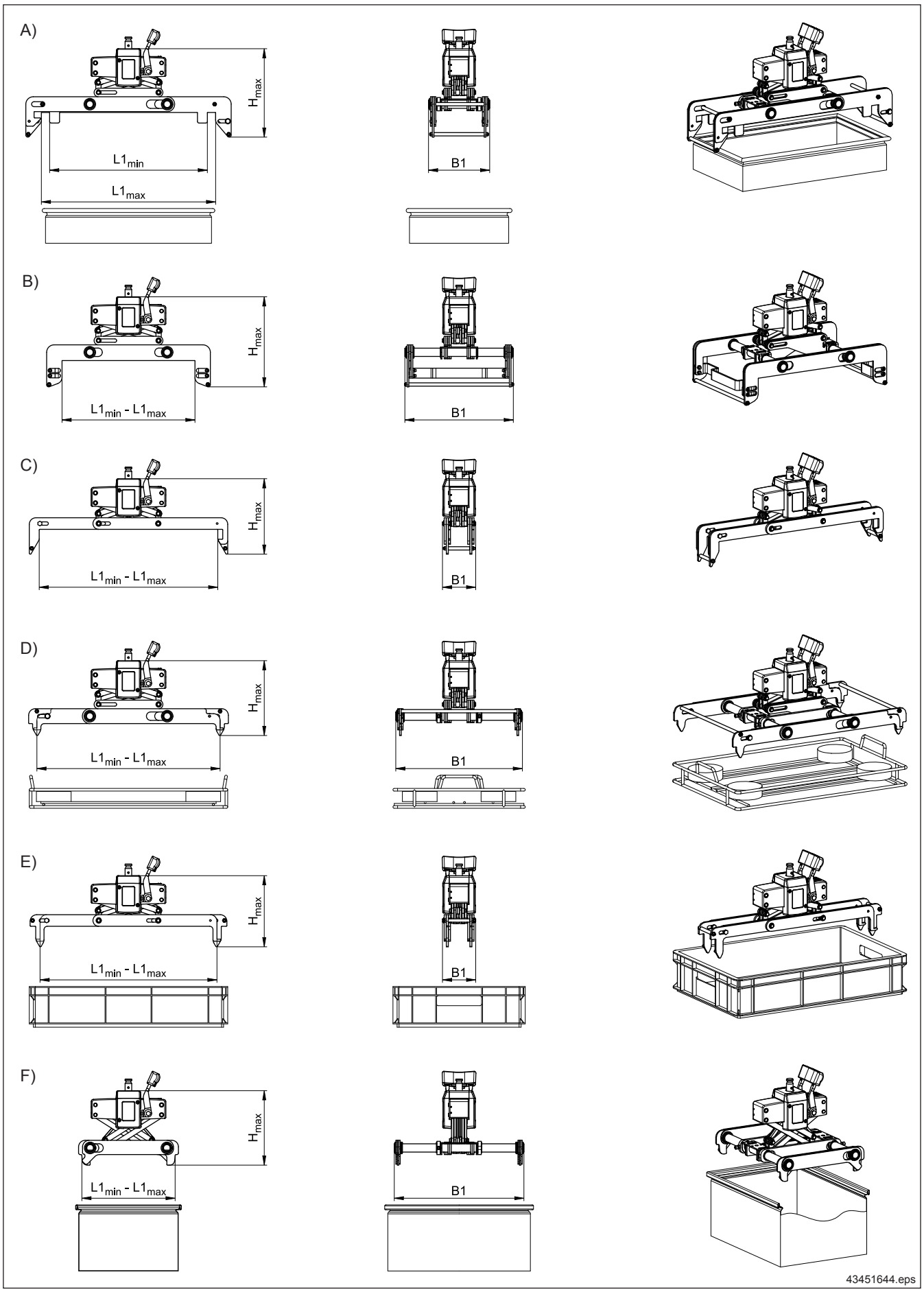

Item	Load capacity [kg]	Type	Description	B1 [mm]	H_{max} [mm]	$L1_{min}$ - $L1_{max}$ [mm]	Part no.	Weight [kg]
A)	63	Outside gripper	For containers with an edge to grip under. Length, width and height can be adapted.	185	267	300 - 810	588 772 46	10 - 15
B)			For containers with an edge to grip under, in particular also for wire mesh baskets. Length, width and height can be adapted. With wide support on the gripper so that several wires of baskets are gripped.	330	273	350 - 400	588 729 46	
C)			For containers with gripping openings. Length and height can be adapted.	100	228	300 - 825	588 899 46	
D)		Inside gripper	For containers with an edge to grip under, in particular also for wire mesh baskets. Length, width and height can be adapted.	383	227	300 - 810	588 680 46	
E)			For containers with gripping openings. Length and height can be adapted.	100	215	300 - 810	588 720 46	
F)		Special containers	For Schäfer-Fix2 metal containers, range 14/6 and 14/7, with an outer width of 300 mm on the bottom surface.	392	225	280 - 306	588 981 46	

For containers without any lifting slots the length may be 300 - 800 mm and the width 200 - 800 mm. In the case of outside grippers, a clearance of min. 50 mm is required on the right and on the left.

Since the grippers for these containers must be adapted specifically for the order, all dimensions of the load and the clearance around the load must be specified.

6.5.5 Parallel gripper system for blocks and cartons

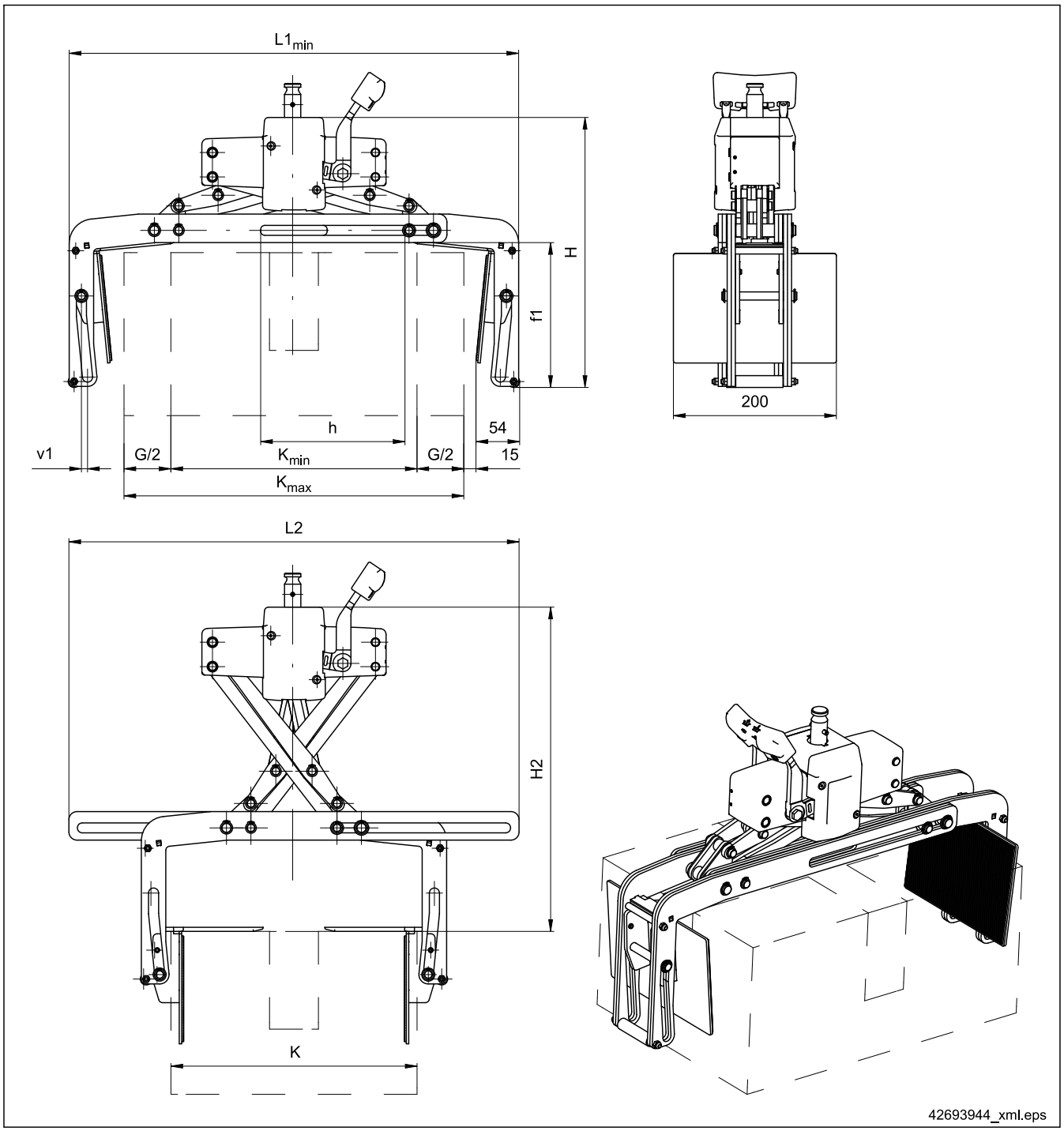

Load capacity	Carton			Useful gripping range	Stroke	Length		Height				Part no.	Weight
	Min. height	K_{min}	K_{max}	G	h	L1	L2	H	H2	v1	f1		
[kg]	[mm]	[mm]	[mm]	[mm]	[mm]	[mm]	[mm]	[mm]	[mm]	[mm]	[mm]		[kg]
63	200	240 1)	800	max. 150	G + 62	K + 138	437,5 - 683,8	331 - 344,2	398 (h ≤ 177) 1,12 x h + 200 (h > 177)	7,5	178	588 843 46	12 - 15,5
	150							296 - 309,2	On request	6,3	143	588 763 46	

1) Gripping range < 240 mm on request

Useful gripping range G is the difference of the cartons to be gripped by the gripper. G should not be selected any larger than actually necessary.

For any other design, please specify the dimensions of the load!

This gripper may not be used with a pneumatic balancer.

In order to maintain a stable carton shape, the cover halves of the carton must be in contact with each other and the tape used to close the carton must be arranged at right angles to the gripping direction when cartons are gripped.

6.5.6 Parallel gripper system basic module

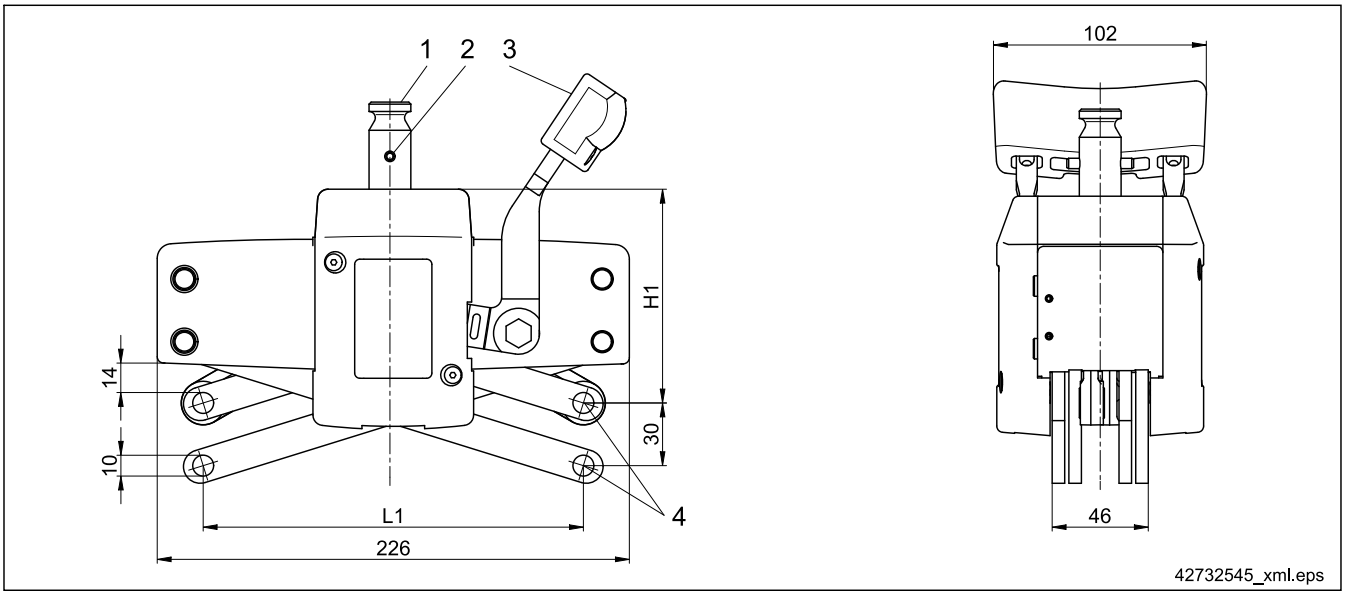

1) Coupling pin
2) Swivel lock
3) Operating lever
4) Bore holes for mounting by the customer

Gripper type	Load capacity	L1	H1	Part no.	Weight 1)
		min. - max.	min. - max.		
	[kg]	[mm]	[mm]		[kg]
PGS125 basic module	63 - 125	39 - 187	93 - 203	840 800 44	6,5

Properties

The basic module enables the customer to fit individual load handling attachments.

7 Load handling attachments

7.1 DPM permanent magnet

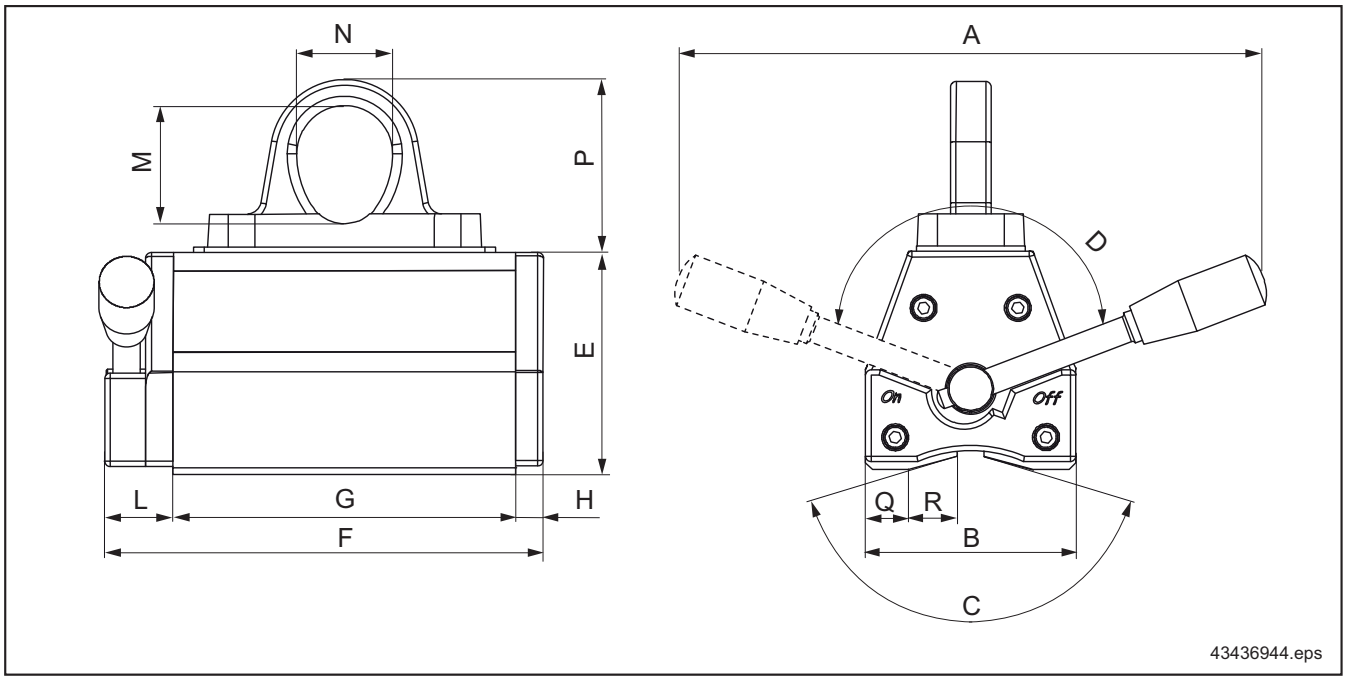

The DPM permanent magnet operates independently of a power supply. The magnet is suspended from the load hook for picking-up loads.

Size	Dimensions [mm]													
	A	B	C	D	E	F	G	H	L	M	N	P	Q	R
DPM 125	220	78	150°	140°	81	160	125	10	25	43	35	63	16	18
DPM 250	374	118		150°	115	196	143	13	40				24	30
DPM 500	380			155°		296	243			60	52	92	31	23
DPM 1000	420	148	160°		145	355	300	15					42	27
DPM 2000	550	177		140°	190	544	480			87	64	130	59	25

Size			DPM 125	DPM 250	DPM 500	DPM 1000	DPM 2000
Part no.			819 906 44	819 907 44	819 908 44	819 909 44	819 910 44
Max. permissible SWL with safety factor of 3:1	Flat load	[kg]	125	250	500	1000	2000
	Round load	[kg]	60	125	250	500	1000
Min. material diameter 1)		[mm]	35	35	35	40	40
Max. material diameter 1)		[mm]	180	270	220	360	340
Max. material length for flat loads 1)		[mm]	2000	2000	2500	3000	3000
Min. material thickness for flat loads 1)		[mm]	10	15	20	30	30
Magnetic range		[mm]	78 x 125	118 x 143	118 x 243	148 x 300	177 x 480
Diameter of suspension eye min. / max.		[mm]	40 / 100	40 / 160	40 / 220	80 / 300	80 / 400
Weight		[kg]	6	14	26	45	95

1) It is not possible to specify generally applicable max. material lengths. The max. transportable material results from two factors:
a) the max. permissible SWL,
b) the load must not bend or be released during lifting.

For further information, please refer to the 'DPM permanent magnet operating instructions', table page 17.

Project-drafing sheet for DC chain hoists

Please configure your DC chain hoist and send the project drafting sheet to the next Demag Cranes & Components sales office or to the relevant agent, authorised reseller or head office in Wetter.

Customer:		**Project no.:**	
		Customer no.:	
		Visit / Tel. / Fax dated:	
Contact:		**Quotation submission date:**	
Telephone / mobile:		**Filled in by (name) / Dept.:**	
Fax:		**Date:**	
Email:			

O Consultation by telephone
O Customer requests visit
O With acceptance
O Test weight available
O Customer has forklift
O Customer has platform
O With assembly
O In normal working hours
O At the weekend

Delivery date _____ Delivery location _____

Please enter model code:

Trolley type Trolley size	Chain hoist type Chain hoist size	Load capacity [kg]	Reeving	Hook path [m]	Hoist speed [v/min]	Oper. voltage/ frequency [V/Hz]	Travel speed [m/min]	Flange width [mm]

Number of chain hoists: _____

Design:
O Stationary
O Travelling
O Low-headroom trolley
O Low-headroom trolley in long design KLDC
Grid dimension _____
O DC Wind
O Double chain hoist
O LDC-D (with connection shaft)
O KLDC-D (short model)
Design O 2/4 O 3/4 O 4/5
Hook centre distance L1 _____ L2 (only for 3/4) _____

Ambient conditions:
O Electroplating, pickling, galvanising plant
O Clean room, class _____
O Foundry
O Foodstuffs sector
O Special ambient temperature < -20 °C / > +45 °C: _____
Other ambient conditions: _____

Special chain:
O Corrud chain
O HS 7 chain
O RS 6 stainless steel V4A chain

Paint finish:
O Special colour in RAL _____

Suspension:
O Standard
O ZMS
O Short suspension bracket (only for DC-Com)
O Suspension ring turned 90°
O Suspension bracket for KBK III (only for DC 15 / 16)
O Suspension hook

Trolley:
O Click-fit push-travel trolley
O EU electric-travel trolley
Travel speed _____
O U push-travel trolley
O EUD articulated trolley
Curve radius _____
Type and size of girder _____
O suitable for KBK size _____
O straight
O for curve travel

Trolley options:
O U11 steel travel rollers
O Supporting roller fitting
O Current collector
O Trolley buffer
O Mechanical coupling with distance _____
O Clamp-fitted buffer
O Thoraxol paint finish for EU56 travel motor / articulated trolley

Motor:
O CSA design
O Microtherm

Load handling attachment (LAM) for Manulift / rocker switch:
O LAM acc. to ident no.
O LAM without ident no.
Ident. no.: _____
Container / load: _____

Control units:
O None
O Standard
O DSK
O DST
Radio control system
O DRC-DC
O DRC-MP

Control cable:
O None
O Standard
O DC support sleeve
O 2TY
O Mobile

Control cable length:
O for H 5 (0,8-3,8 m)
O for H 8 (3,9-6,8 m)
O for H11 (6,9-9,8 m)
Cable length longer than H11: _____

Additional plug-and-socket connector:
O Harting main power supply system
O Harting control cable

20352544.indd/180713

Limit switches:	O Lifting / lowering (only DC-Com 1/1) O Cross-travel limit switches Geared limit switch	O 3 contacts	O 4 contacts (for external use) O 8 contacts (for external use)
Additional electric equipment:	O Control of the DC unit via floating contacts with 24 V AC(DC terminal box / diode) O DC control by means of conventional control signals / contacts 42-230 V AC, 50/60 Hz (KT3 / DT3 signal converter) O Control of an AC travel motor (Polu-box) O Generation of conventional control signals / contacts of 42-230 V AC, 50/60 Hz (3TK signal converter) O 2 chain hoists in tandem operation O Overload cut-off with ZMS and electrical evaluation device O Rotary encoder fitting type _____ O Double brake		
Power supply:	O KBK 25 trailing cable power supply	O DCL-Pro conductor line	
Chain hoist delivery form with trolley:	O Chain hoist completed with trolley		
Further special features, e.g.:	O Canopy O Heat protection shield O Oil tray	O Chain hoist designed in accordance with BGV-D8+ O IP65 type of enclosure (only DC 1 - 15) O Control pendant jib length _____	

The current addresses of our sales offices, subsidiaries and agencies worldwide can be found on the Demag Cranes & Components GmbH homepage at
www.demagcranes.com/Contact

Demag Cranes & Components GmbH
PO Box 67 · 58286 Wetter (Germany)
Phone +49 (0)2335 92-0
Fax +49 (0)2335 92-7676
www.demagcranes.com

Printed in Germany